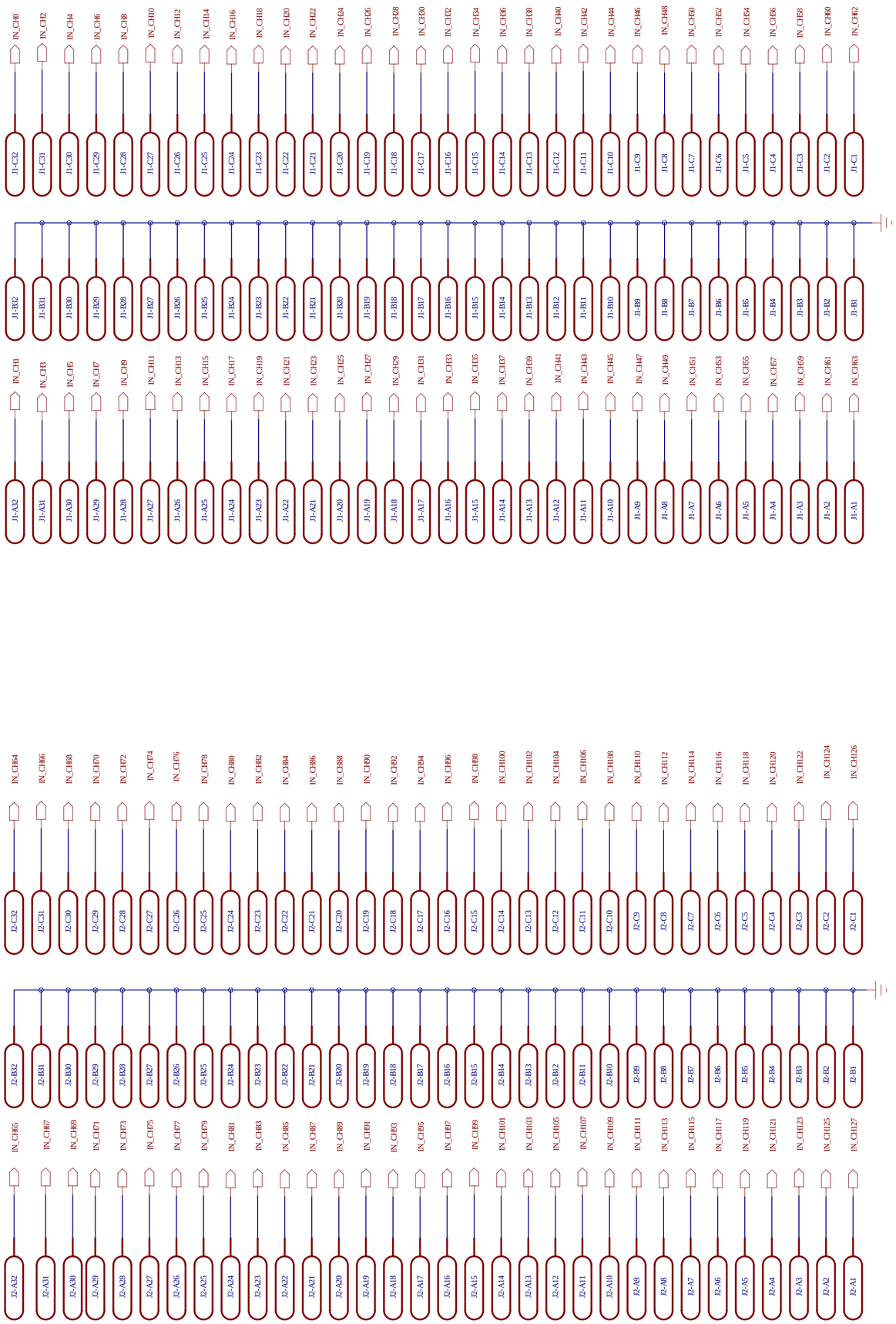

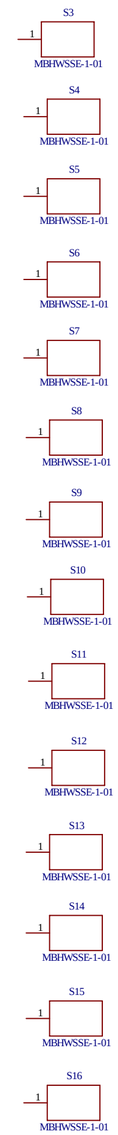

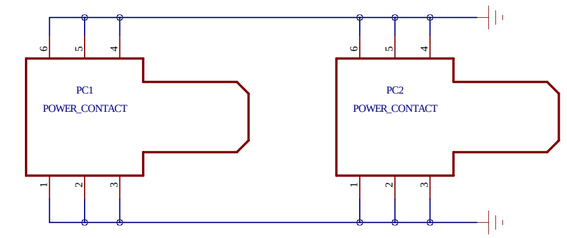

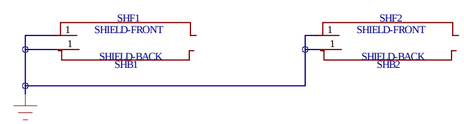

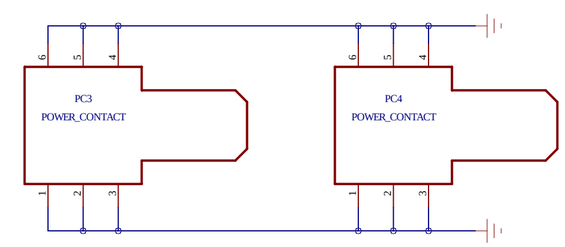

REVISION RECORD

LTR	ECO NO:	APPROVED:	DATE:

COMPANY:	Nevis Laboratories of Columbia University		
TITLE:	FEB2 prototype v2.0		
DRAWN: Jb	DATED: <Drawn Date>		
CHECKED: jb	DATED: <Checked Date>	CODE: jb2023	SIZE: C
QUALITY CONTROL: jb	DATED: <QC Date>	DRAWING NO: 35	REV: v2.0
RELEASED: jb	DATED: <Release Date>	SCALE: <Scale>	SHEET: 1 OF 155

C

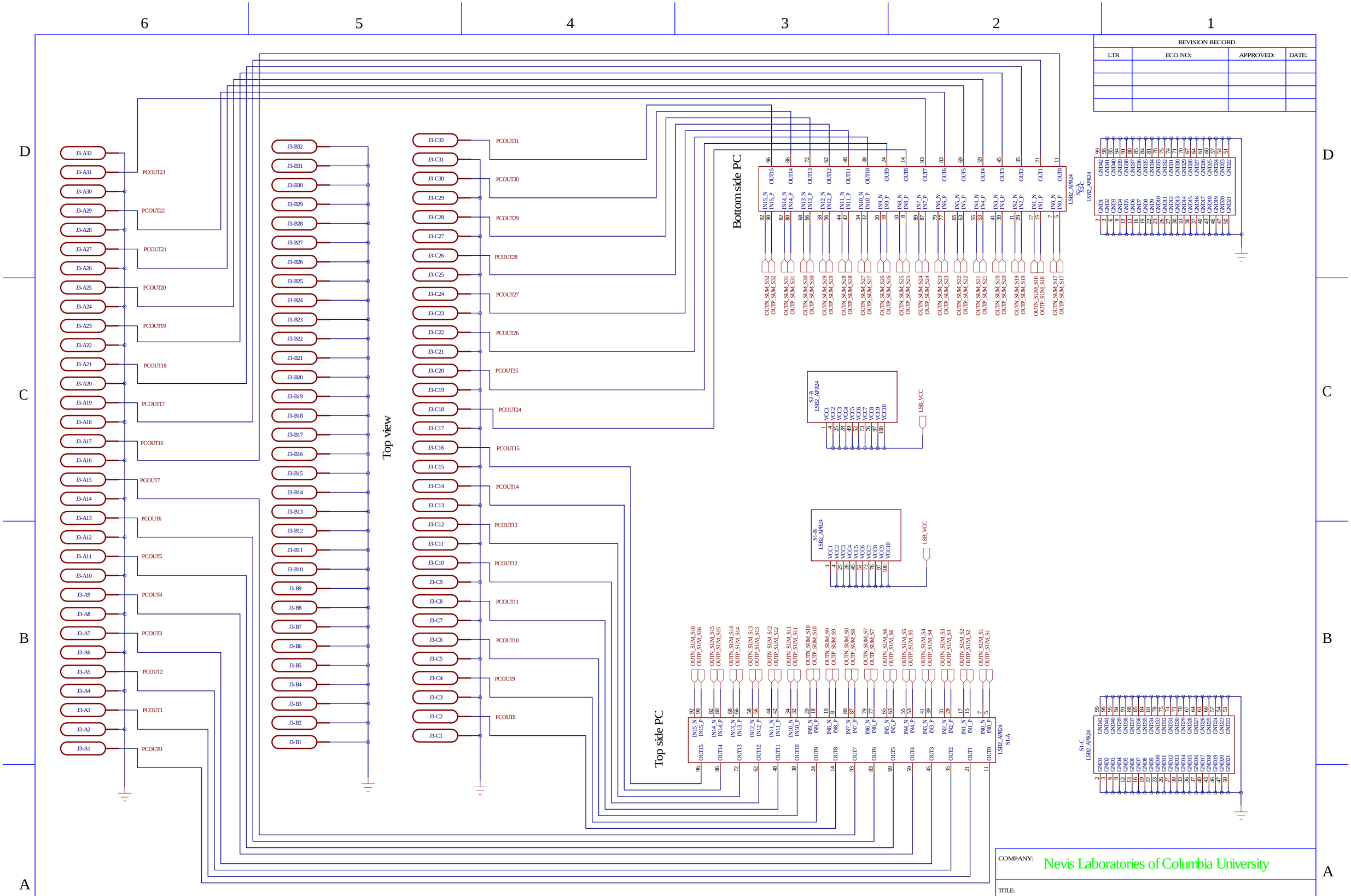

REVISION RECORD			
LTR	ECO NO:	APPROVED:	DATE:

COMPANY: Nevis Laboratories of Columbia University

TITLE: FEB2 prototype v2.0

DRAWN: Jb	DATED: <Drawn Date>		
CHECKED: jb	DATED: <Checked Date>		
QUALITY CONTROL: jb	DATED: <QC Date>		
RELEASED: jb	DATED: <Release Date>		

CODE:	SIZE:	DRAWING NO:	REV:
jb2023	C	35	v2.0

SCALE: <Scale> SHEET: 2 OF 155

REVISION RECORD			
LTR	ECO NO:	APPROVED:	DATE:

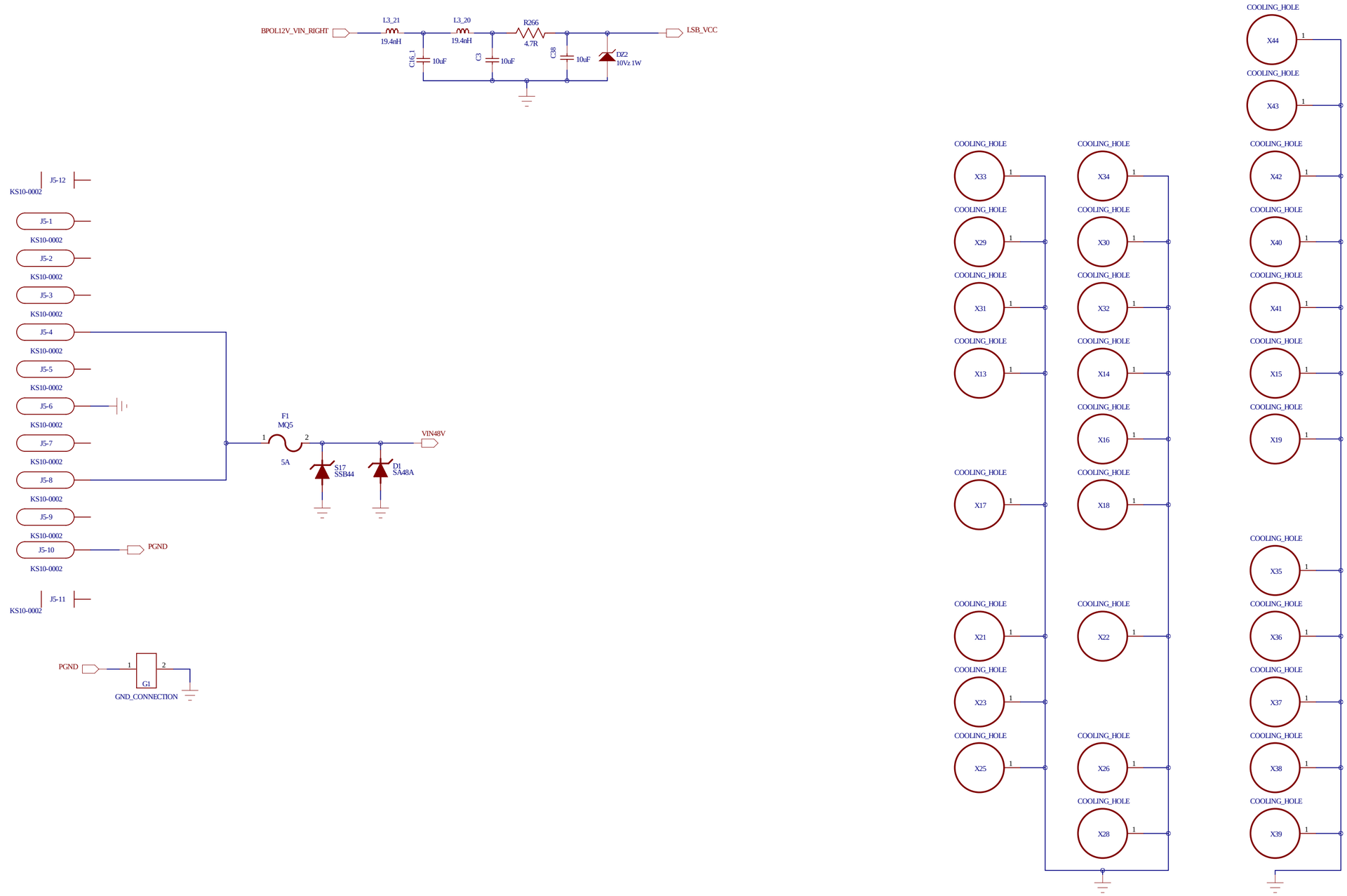

DRAWN: Jb	DATED: <Drawn Date>	COMPANY: Nevis Laboratories of Columbia University			
CHECKED: jb	DATED: <Checked Date>	TITLE: FEB2 prototype v2.0			
QUALITY CONTROL: jb	DATED: <QC Date>	CODE: jb2023	SIZE: C	DRAWING NO: 35	REV: v2.0
RELEASED: jb	DATED: <Release Date>	SCALE: <Scale>		SHEET: 3 OF 155	

REVISION RECORD			
LTR	ECO NO:	APPROVED:	DATE:

Mounting holes for the panel

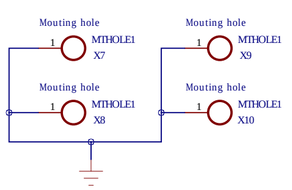

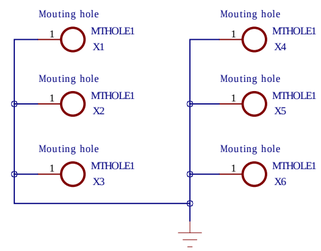

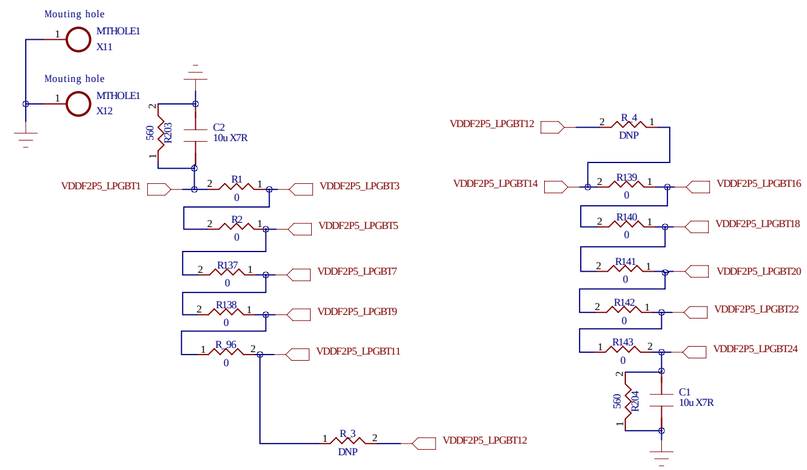

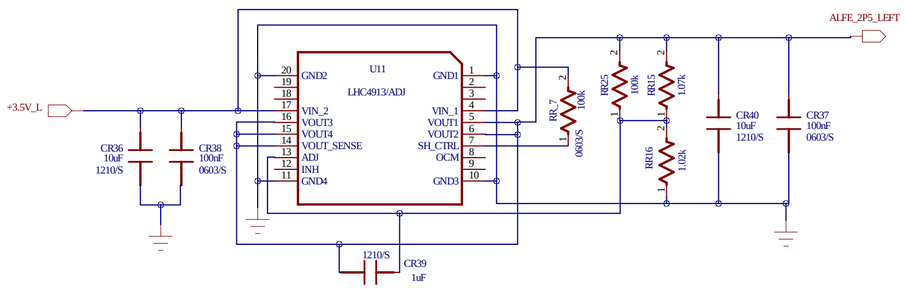

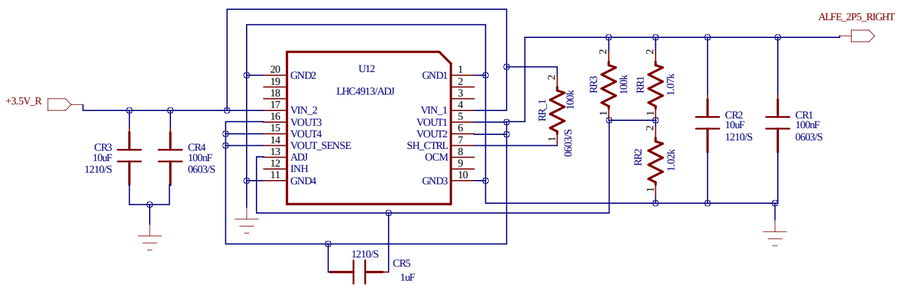

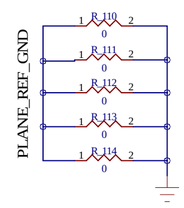

DRAWN: Jb	DATED: <Drawn Date>	COMPANY: Nevis Laboratories of Columbia University			
CHECKED: jb	DATED: <Checked Date>	TITLE: FEB2 prototype v2.0			
QUALITY CONTROL: jb	DATED: <QC Date>	CODE: jb2023	SIZE: C	DRAWING NO: 35	REV: v2.0
RELEASED: jb	DATED: <Release Date>	SCALE: <Scale>		SHEET: 6 OF 155	

REVISION RECORD			
LTR	ECO NO:	APPROVED:	DATE:

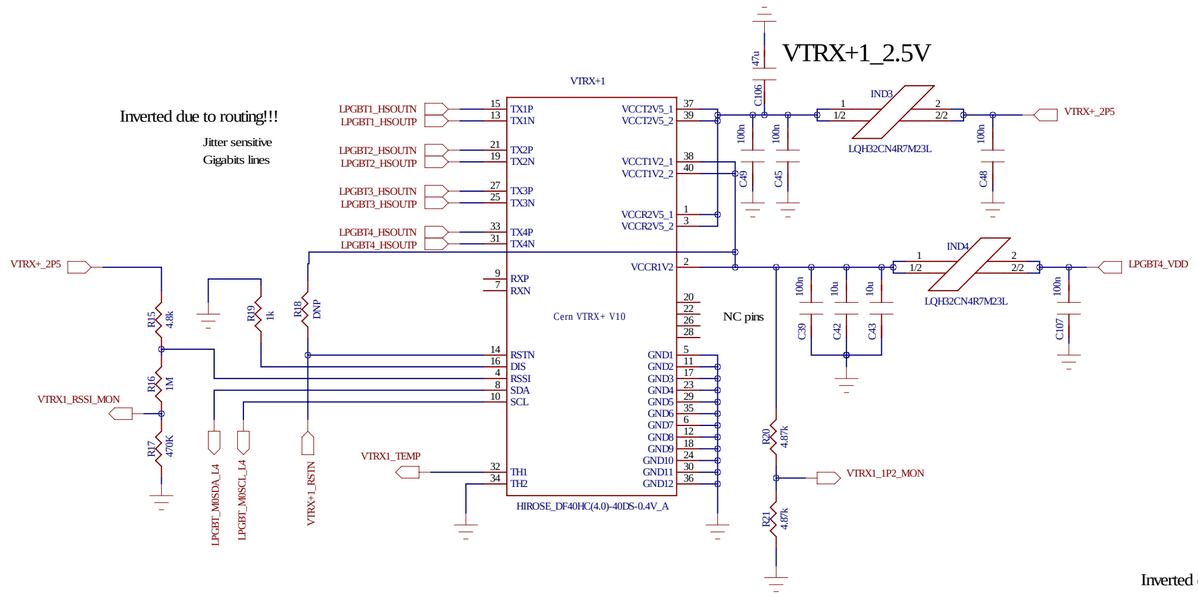

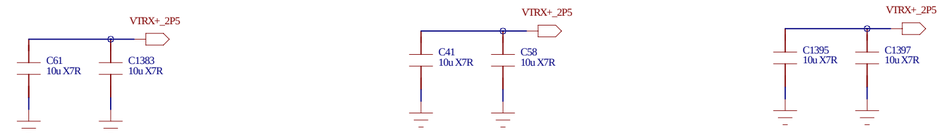

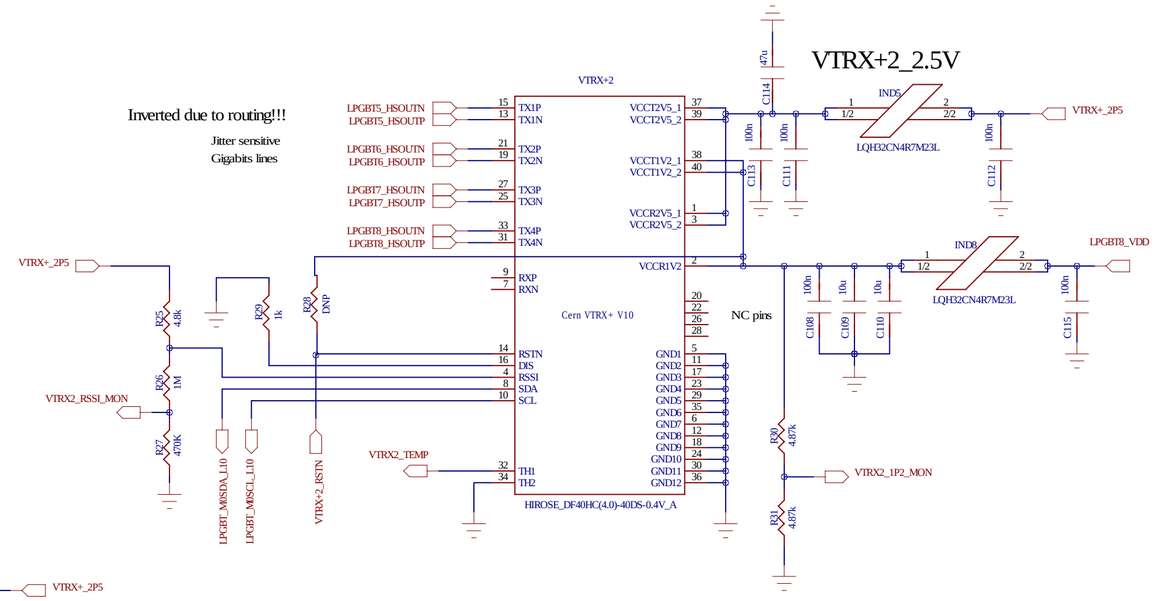

Chnge the RSTN resistoer on all VTRx+s from DNP to 1K

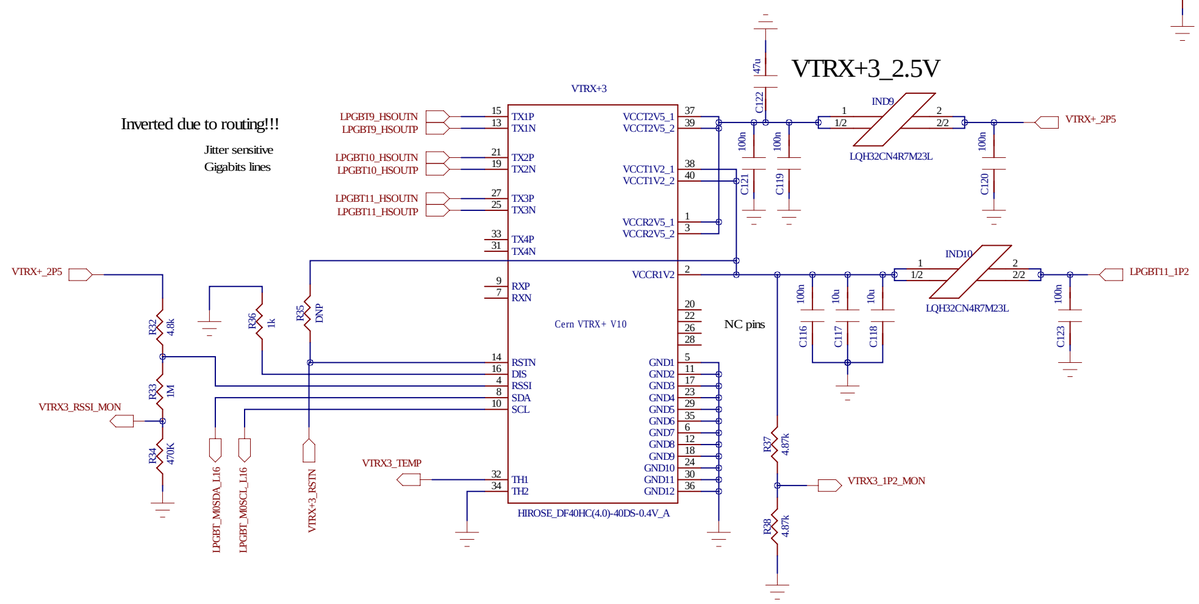

DRAWN: Jb	DATED: <Drawn Date>	COMPANY: Nevis Laboratories of Columbia University			
CHECKED: jb	DATED: <Checked Date>	TITLE: FEB2 prototype v2.0			
QUALITY CONTROL: jb	DATED: <QC Date>	CODE: jb2023	SIZE: C	DRAWING NO: 35	REV: v2.0
RELEASED: jb	DATED: <Release Date>	SCALE: <Scale>		SHEET: 35 OF 155	

REVISION RECORD			
LTR	ECO NO:	APPROVED:	DATE:

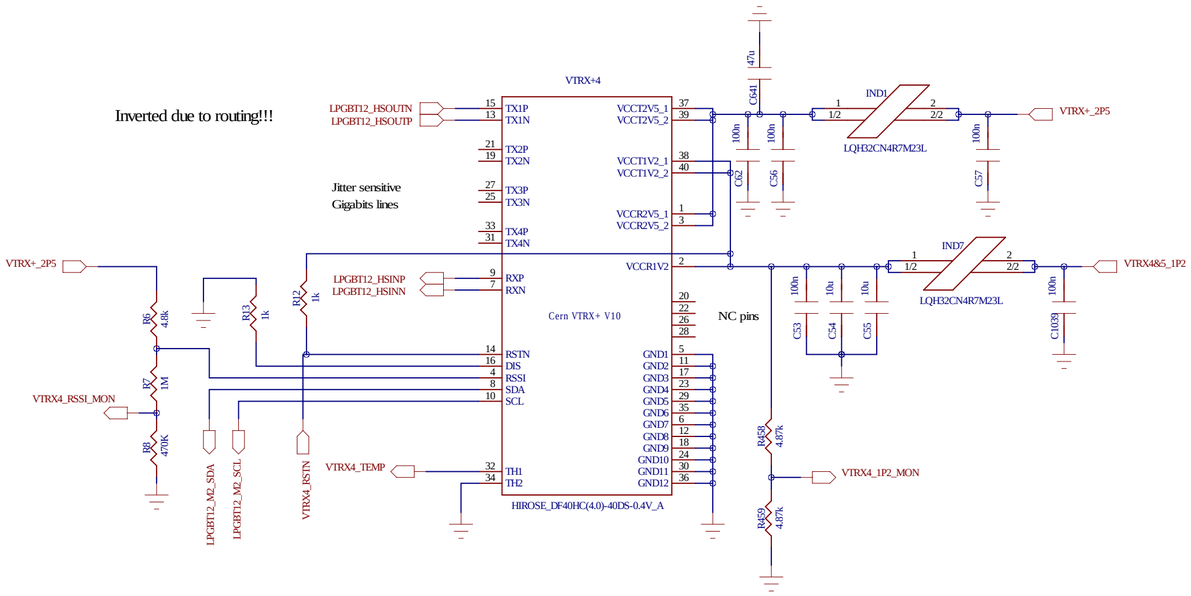

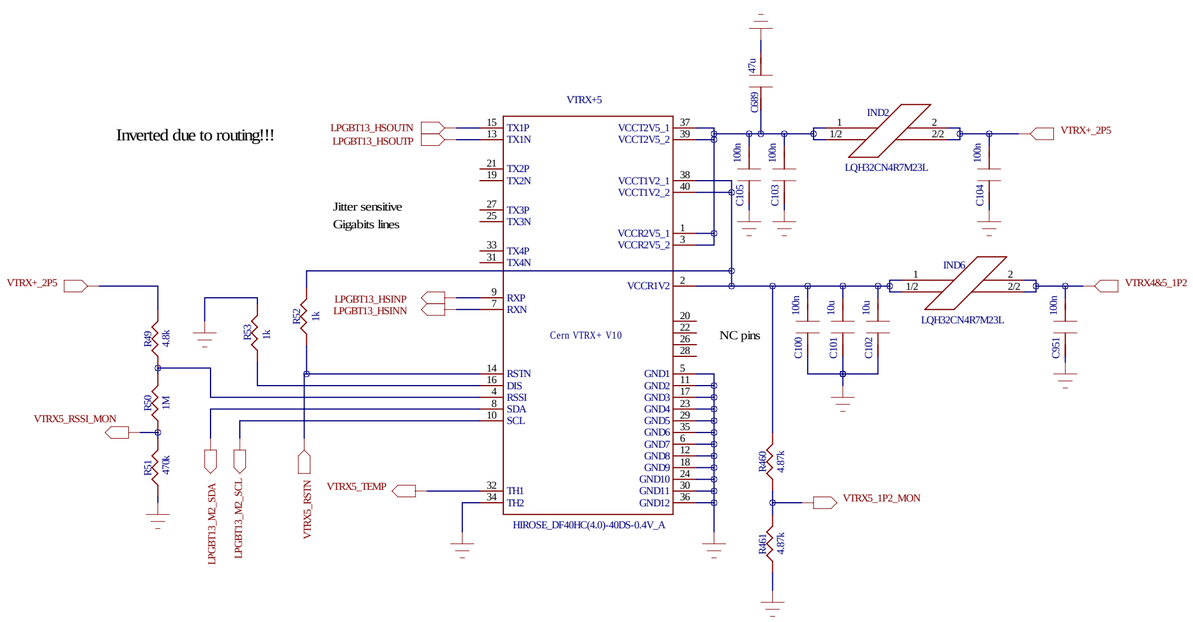

LpGBT12&13_+1.2V

VTRX4&5_1P2_LDO

Supply rail switch for LpGBT12&13

Use CMS LDO output

Use DC-DC output

This option needs changed resistor R10_M10 to value of 499kOhm

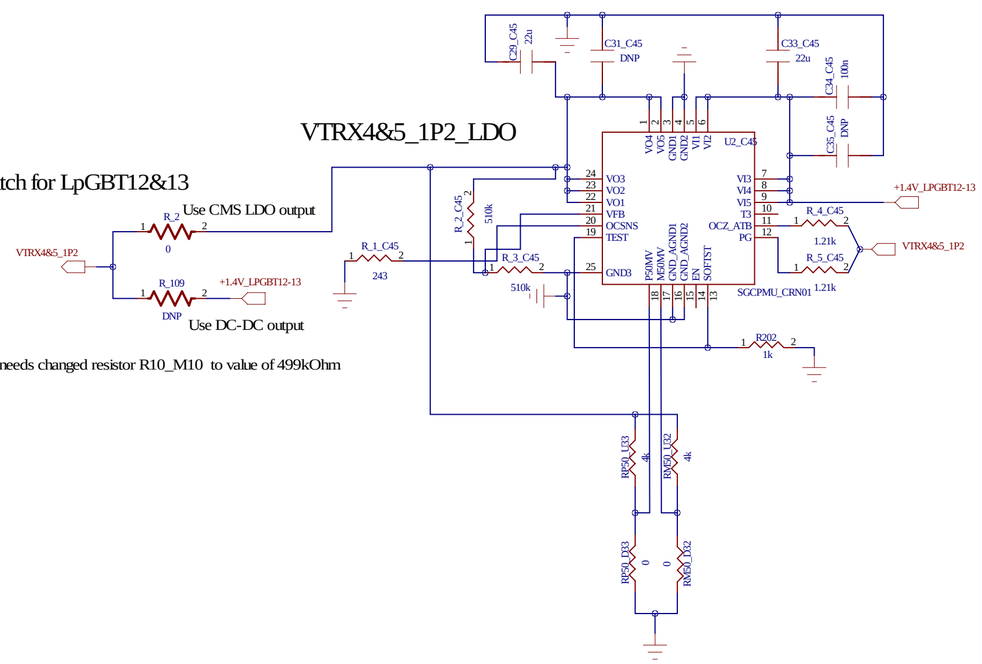

DRAWN: Jb	DATED: <Drawn Date>	COMPANY: Nevis Laboratories of Columbia University			
CHECKED: jb	DATED: <Checked Date>	TITLE: FEB2 prototype v2.0			
QUALITY CONTROL: jb	DATED: <QC Date>	CODE: jb2023	SIZE: C	DRAWING NO: 35	REV: v2.0
RELEASED: jb	DATED: <Release Date>	SCALE: <Scale>		SHEET: 6 OF 155	

REVISION RECORD			
LTR	ECO NO:	APPROVED:	DATE:

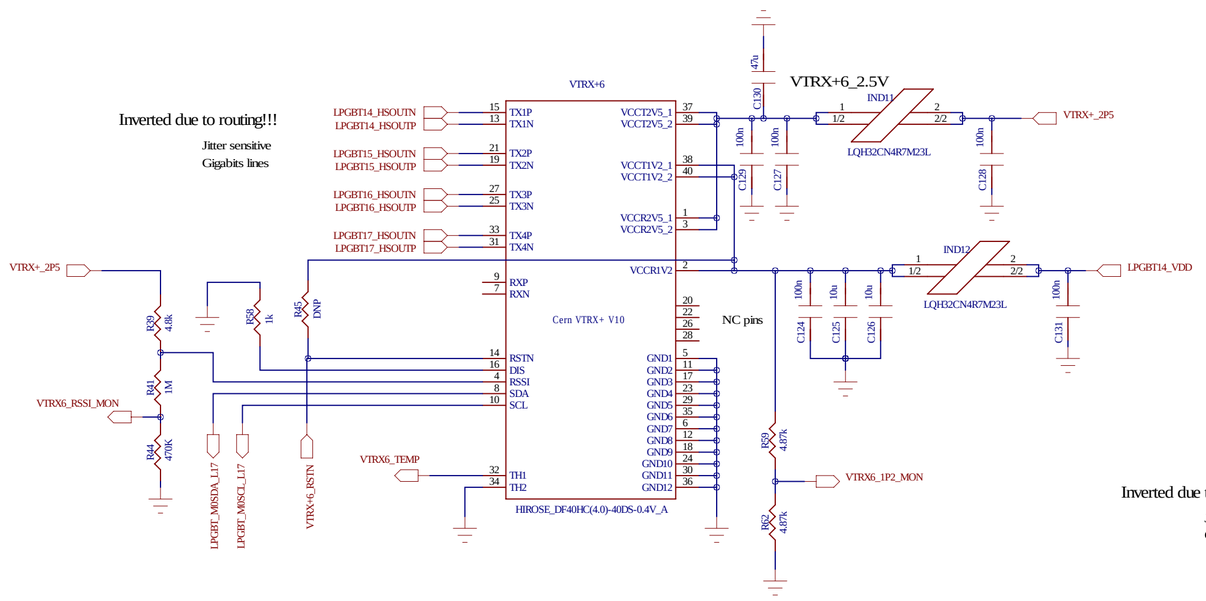

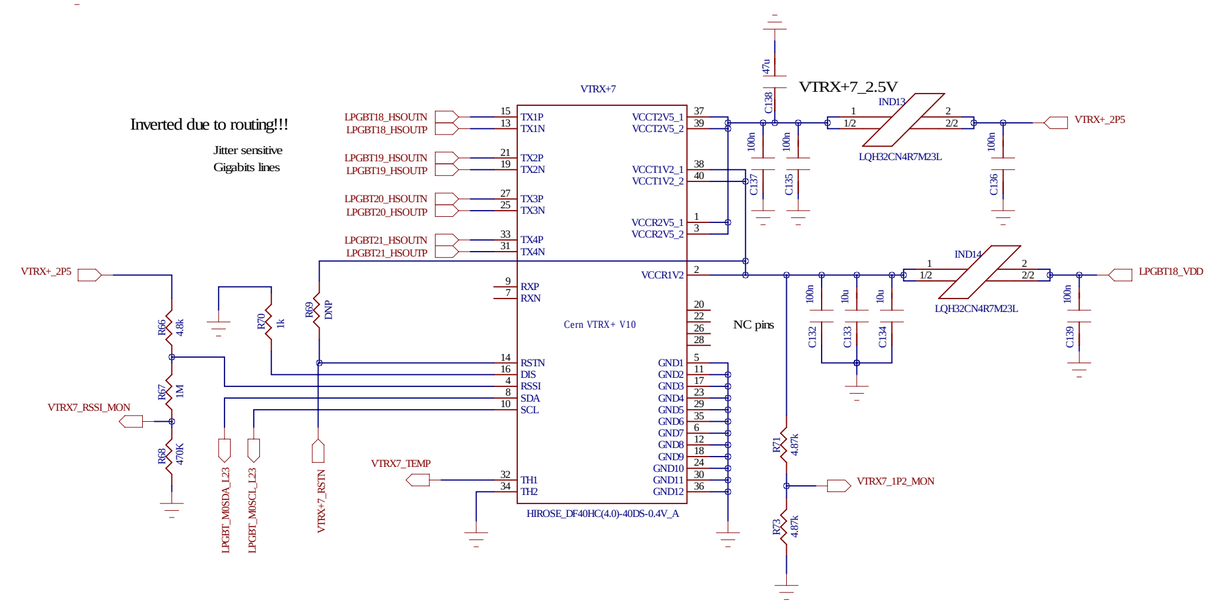

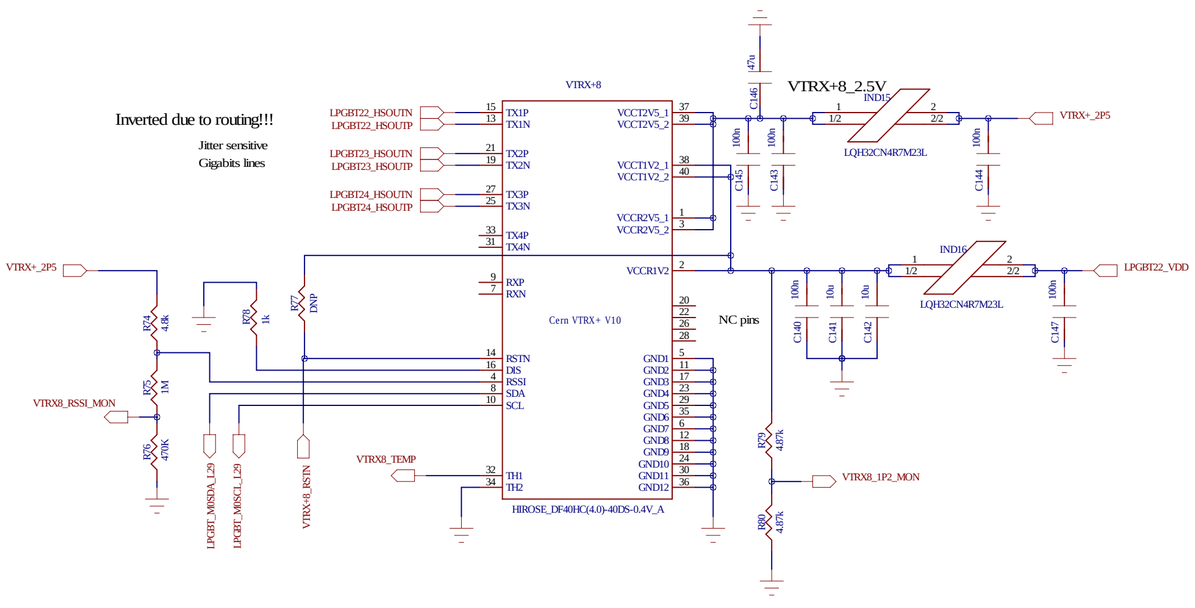

COMPANY: Nevis Laboratories of Columbia University				
TITLE: FEB2 prototype v2.0				
DRAWN: Jb	DATED: <Drawn Date>	CODE: jb2023	SIZE: C	DRAWING NO: 35 / REV: v2.0
CHECKED: jb	DATED: <Checked Date>			
QUALITY CONTROL: jb	DATED: <QC Date>			
RELEASED: jb	DATED: <Release Date>	SCALE: <Scale>	SHEET: 7 OF 155	

REVISION RECORD			
LTR	ECO NO:	APPROVED:	DATE:

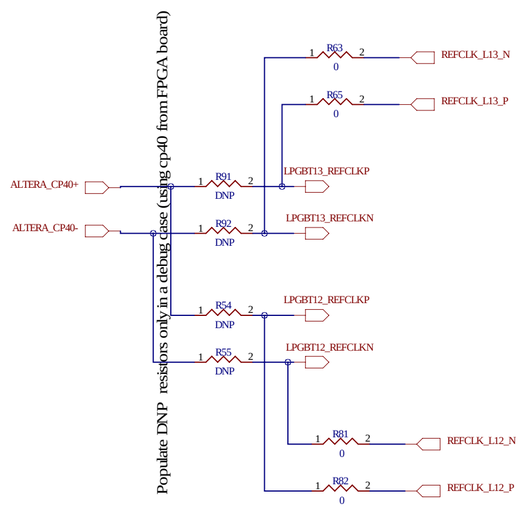

COMPANY: Nevis Laboratories of Columbia University				
TITLE: FEB2 prototype v2.0				
DRAWN: Jb	DATED: <Drawn Date>	CODE: jb2023	SIZE: C	DRAWING NO: 35 / REV: v2.0
CHECKED: jb	DATED: <Checked Date>			
QUALITY CONTROL: jb	DATED: <QC Date>			
RELEASED: jb	DATED: <Release Date>	SCALE: <Scale>	SHEET: 8 OF 155	

REVISION RECORD			
LTR	ECO NO:	APPROVED:	DATE:

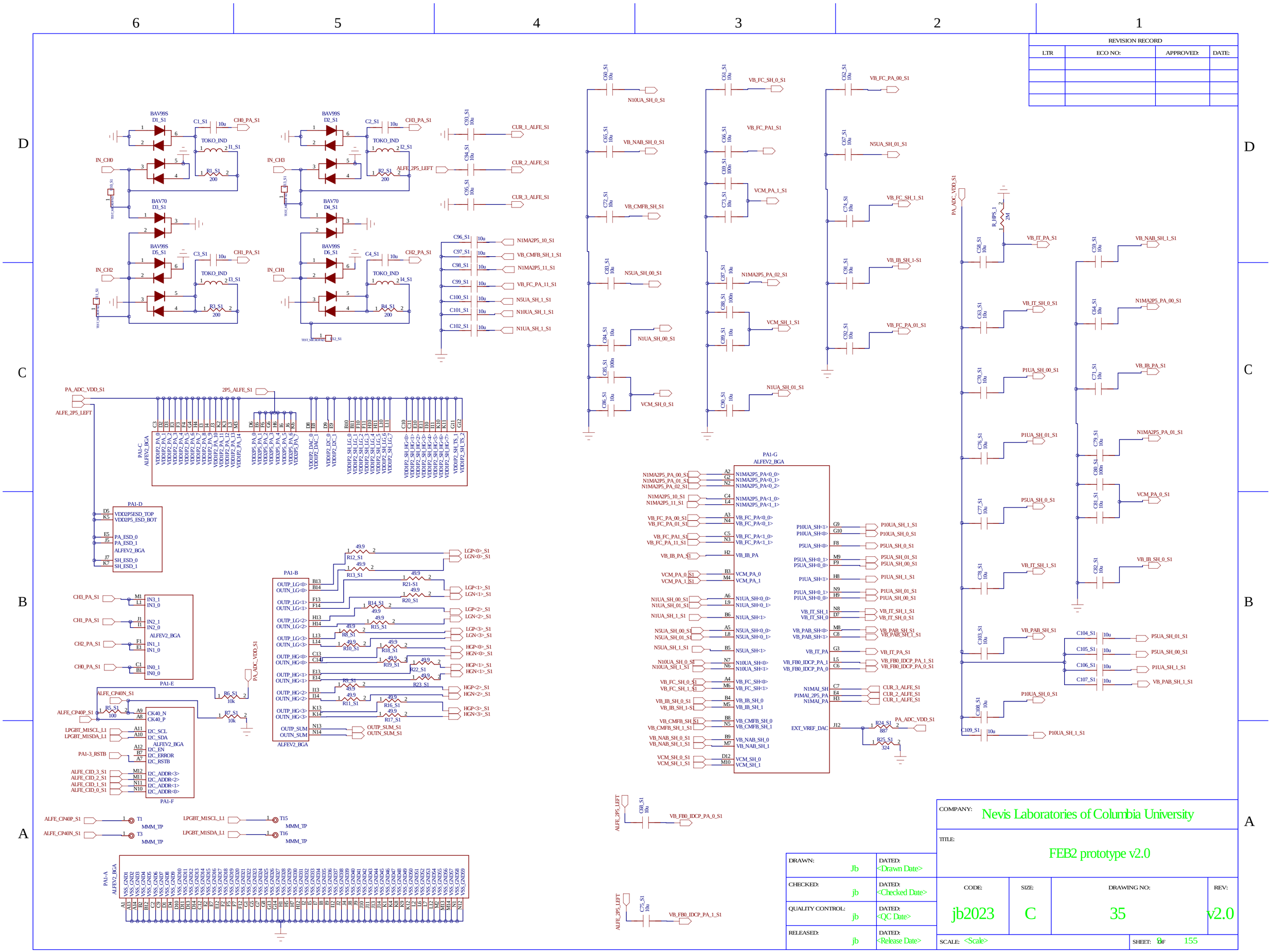

DRAWN: Jb	DATED: <Drawn Date>	COMPANY: Nevis Laboratories of Columbia University	
CHECKED: jb	DATED: <Checked Date>	TITLE: FEB2 prototype v2.0	
QUALITY CONTROL: jb	DATED: <QC Date>	CODE: jb2023	SIZE: C
RELEASED: jb	DATED: <Release Date>	DRAWING NO: 35	REV: v2.0
		SCALE: <Scale>	SHEET: 9 OF 155

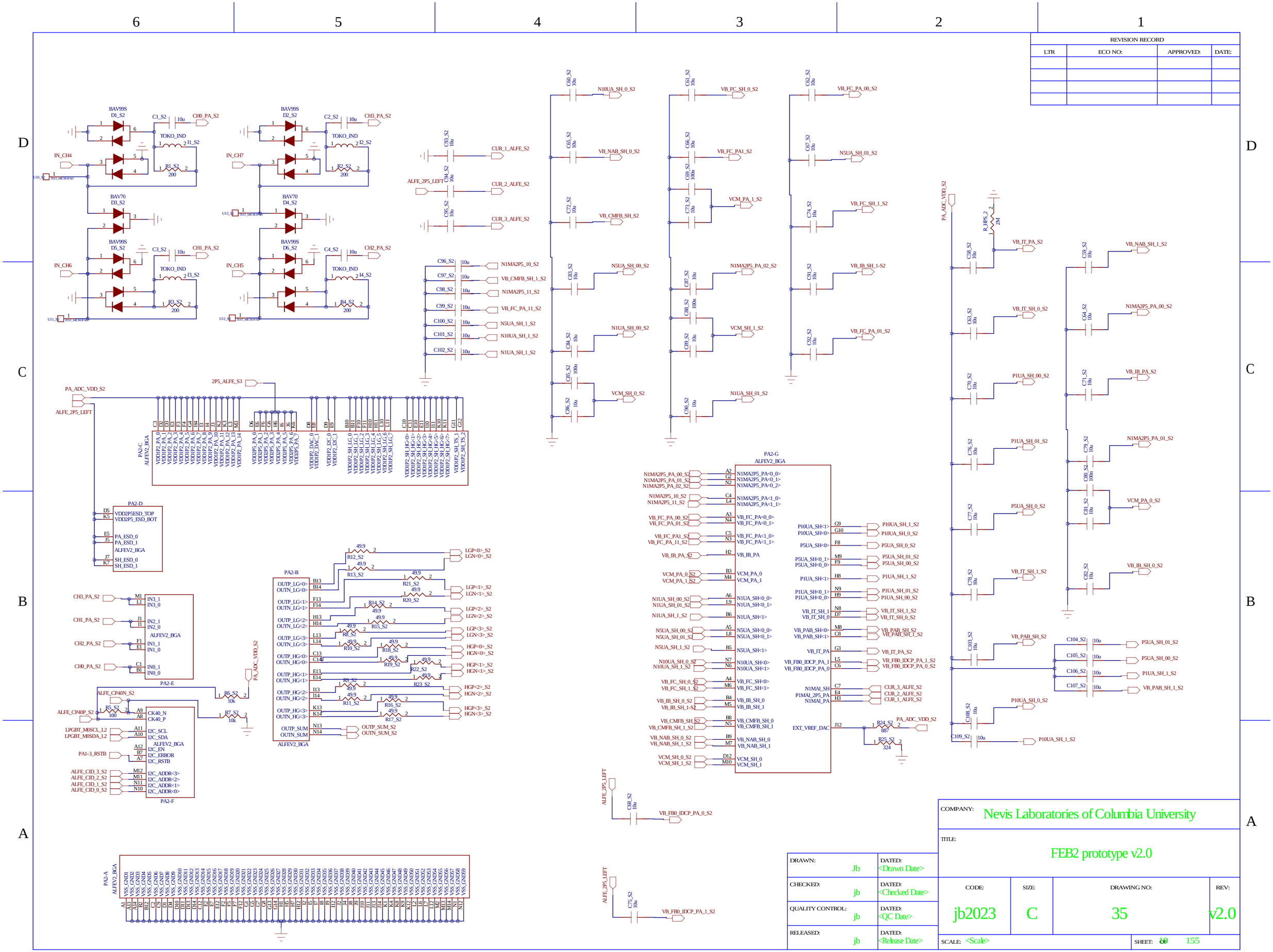
6
5
4
3
2
1
D
C
B
A
REVISION RECORD
LTR
ECO NO:
APPROVED:
DATE:
BAV99S D1_S2
BAV99S D2_S2
BAV70 D3_S2
BAV70 D4_S2
BAV99S D5_S2
BAV99S D6_S2
TOKO_IND
IN_CH4
IN_CH7
IN_CH6
IN_CH5
CH0_PA_S2
CH3_PA_S2
CH1_PA_S2
CH2_PA_S2
PA_ADC_VDD_S2
ALFE_2P5_LEFT
2P5_ALFE_S3
PA2-C ALFEV2_BGA
PA2-D
PA2-E
PA2-F
PA2-G ALFEV2_BGA
PA2-B
PA2-A ALFEV2_BGA
ALFEV2_BGA
N10UA_SH_0_S2
VB_NAB_SH_0_S2
VB_CMFB_SH_S2
N5UA_SH_00_S2
N1UA_SH_00_S2
VCM_SH_0_S2
VB_FC_SH_0_S2
VB_FC_PA1_S2
VCM_PA_1_S2
N1MA2P5_PA_02_S2
VCM_SH_1_S2
N1UA_SH_01_S2
VB_FC_PA_00_S2
N5UA_SH_01_S2
VB_FC_SH_1_S2
VB_IB_SH_1-S2
VB_FC_PA_01_S2
VB_IT_PA_S2
VB_IT_SH_0_S2
P1UA_SH_00_S2
P1UA_SH_01_S2
VB_IT_SH_1_S2
VB_PAB_SH_S2
P10UA_SH_0_S2
VB_NAB_SH_1_S2
N1MA2P5_PA_00_S2
VB_IB_PA_S2
N1MA2P5_PA_01_S2
VCM_PA_0_S2
VB_IB_SH_0_S2
P5UA_SH_01_S2
P5UA_SH_00_S2
P1UA_SH_1_S2
VB_PAB_SH_1_S2
P10UA_SH_1_S2
VB_FB0_IDCP_PA_0_S2
VB_FB0_IDCP_PA_1_S2
CUR_1_ALFE_S2
CUR_2_ALFE_S2
CUR_3_ALFE_S2
N1MA2P5_10_S2
VB_CMFB_SH_1_S2
N1MA2P5_11_S2
VB_FC_PA_11_S2
N5UA_SH_1_S2
N10UA_SH_1_S2
N1UA_SH_1_S2
OUTP_SUM_S2
OUTN_SUM_S2
COMPANY:
Nevis Laboratories of Columbia University
TITLE:
FEB2 prototype v2.0
DRAWN: Jb
DATED: <Drawn Date>
CHECKED: jb
DATED: <Checked Date>
QUALITY CONTROL: jb
DATED: <QC Date>
RELEASED: jb
DATED: <Release Date>
CODE: jb2023
SIZE: C
DRAWING NO: 35
REV: v2.0
SCALE: <Scale>
SHEET: 10 OF 155

REVISION RECORD			
LTR	ECO NO:	APPROVED:	DATE:

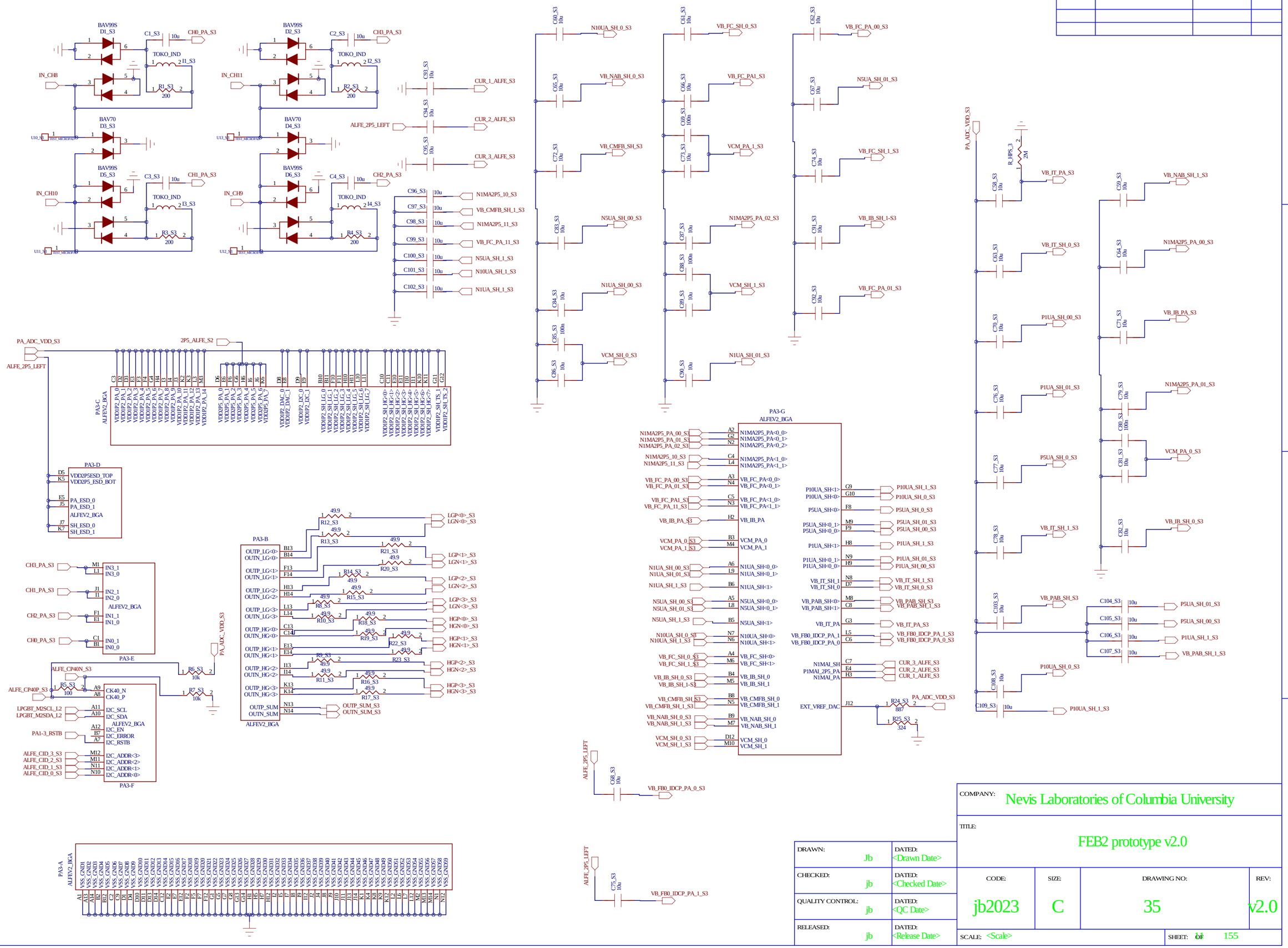

DRAWN: Jb	DATED: <Drawn Date>	COMPANY: Nevis Laboratories of Columbia University	
CHECKED: jb	DATED: <Checked Date>	TITLE: FEB2 prototype v2.0	
QUALITY CONTROL: jb	DATED: <QC Date>	CODE: jb2023	SIZE: C
RELEASED: jb	DATED: <Release Date>	DRAWING NO: 35	REV: v2.0
		SCALE: <Scale>	SHEET: 14 OF 155

REVISION RECORD			
LTR	ECO NO:	APPROVED:	DATE:

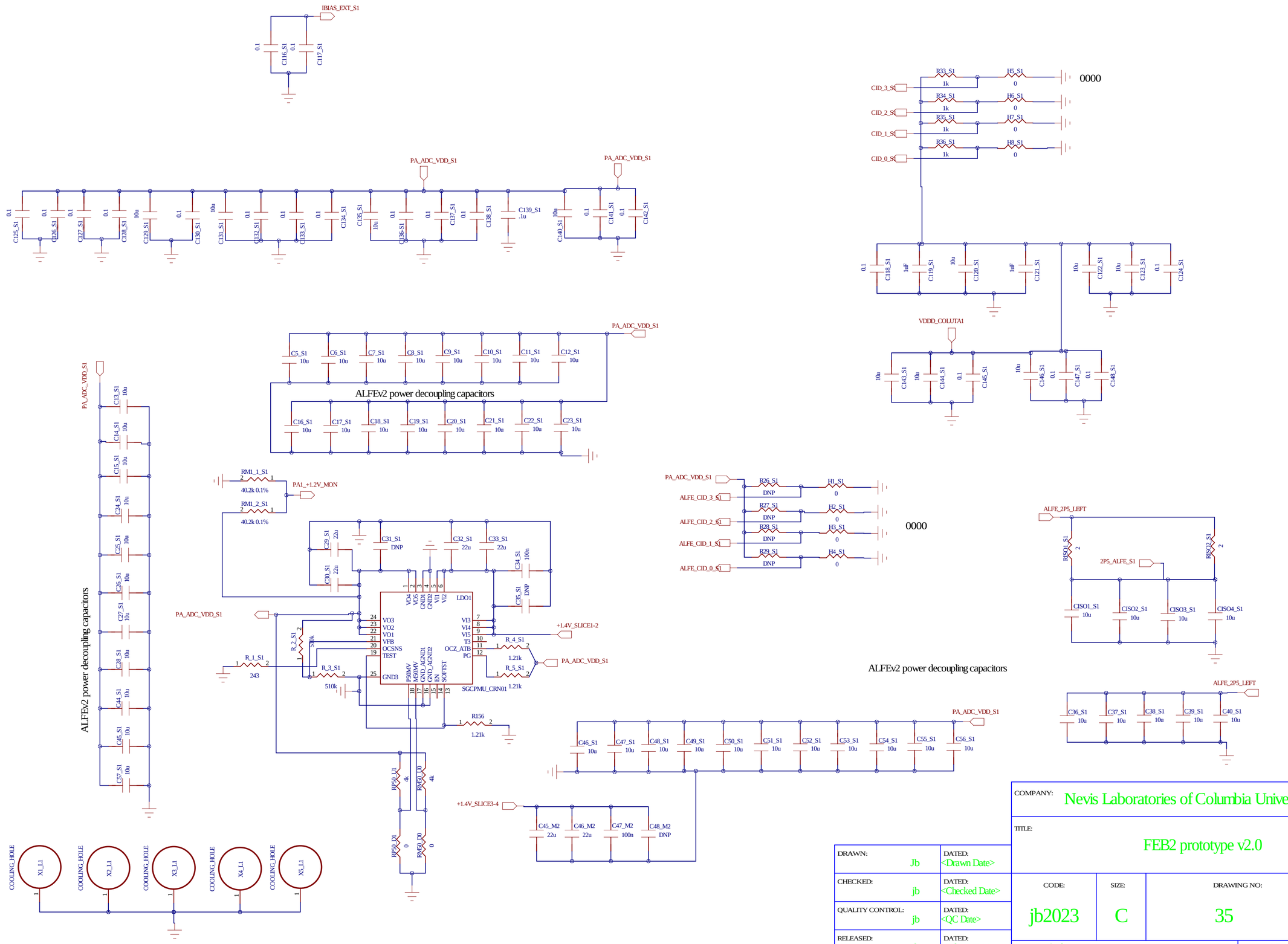

DRAWN: Jb	DATED: <Drawn Date>	COMPANY: Nevis Laboratories of Columbia University	
CHECKED: jb	DATED: <Checked Date>	TITLE: FEB2 prototype v2.0	
QUALITY CONTROL: jb	DATED: <QC Date>	CODE: jb2023	SIZE: C
RELEASED: jb	DATED: <Release Date>	DRAWING NO: 35	REV: v2.0
		SCALE: <Scale>	SHEET: 12 OF 155

REVISION RECORD			
LTR	ECO NO:	APPROVED:	DATE:

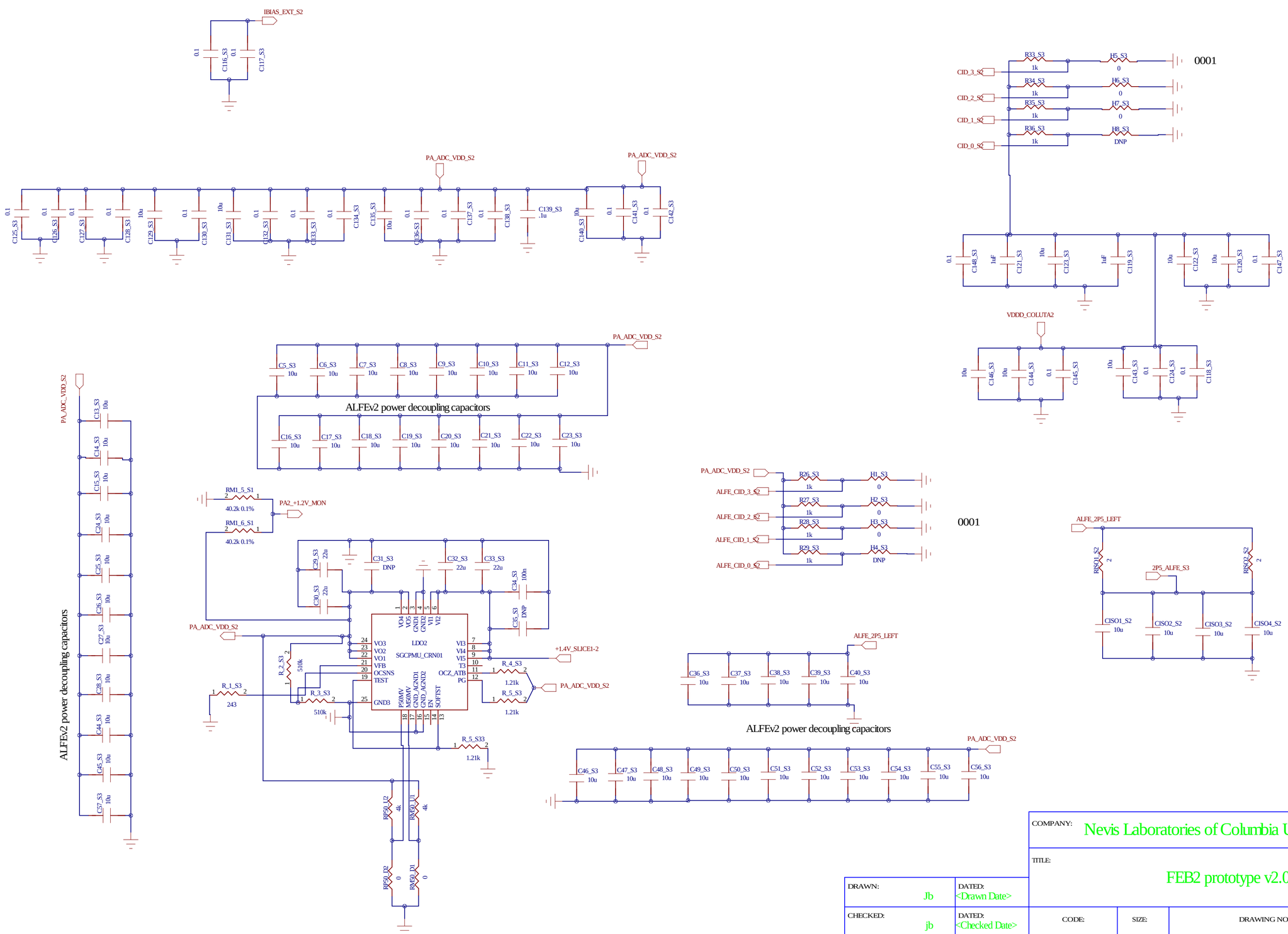

DRAWN: Jb	DATED: <Drawn Date>	COMPANY: Nevis Laboratories of Columbia University	
CHECKED: jb	DATED: <Checked Date>	TITLE: FEB2 prototype v2.0	
QUALITY CONTROL: jb	DATED: <QC Date>	CODE: jb2023 / SIZE: C / DRAWING NO: 35	REV: v2.0
RELEASED: jb	DATED: <Release Date>	SCALE: <Scale>	SHEET: 13 OF 155

REVISION RECORD			
LTR	ECO NO:	APPROVED:	DATE:

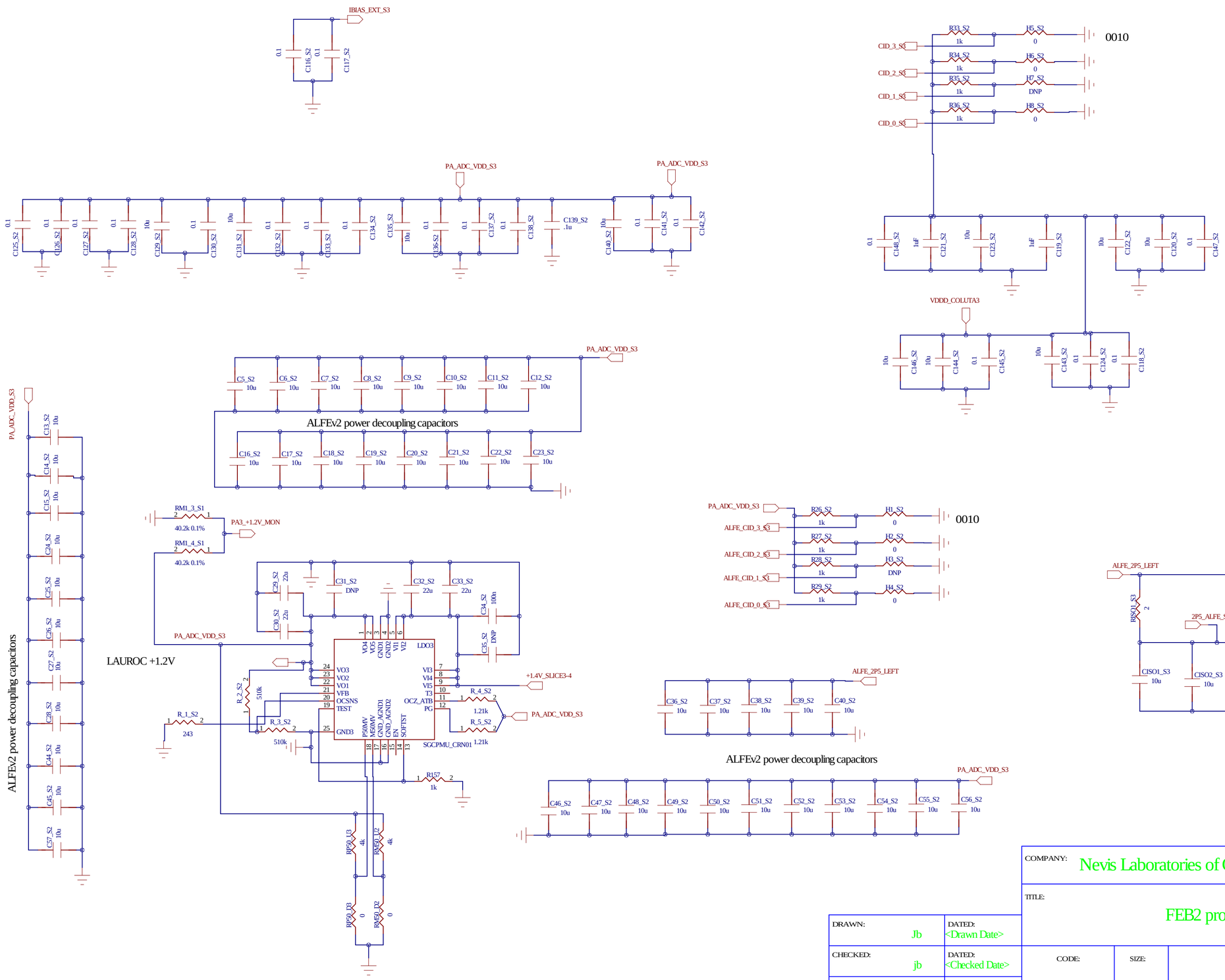

DRAWN: Jb	DATED: <Drawn Date>	COMPANY: Nevis Laboratories of Columbia University	
CHECKED: jb	DATED: <Checked Date>	TITLE: FEB2 prototype v2.0	
QUALITY CONTROL: jb	DATED: <QC Date>	CODE: jb2023	SIZE: C
RELEASED: jb	DATED: <Release Date>	DRAWING NO: 35	REV: v2.0
		SCALE: <Scale>	SHEET: 64 155

REVISION RECORD			
LTR	ECO NO:	APPROVED:	DATE:

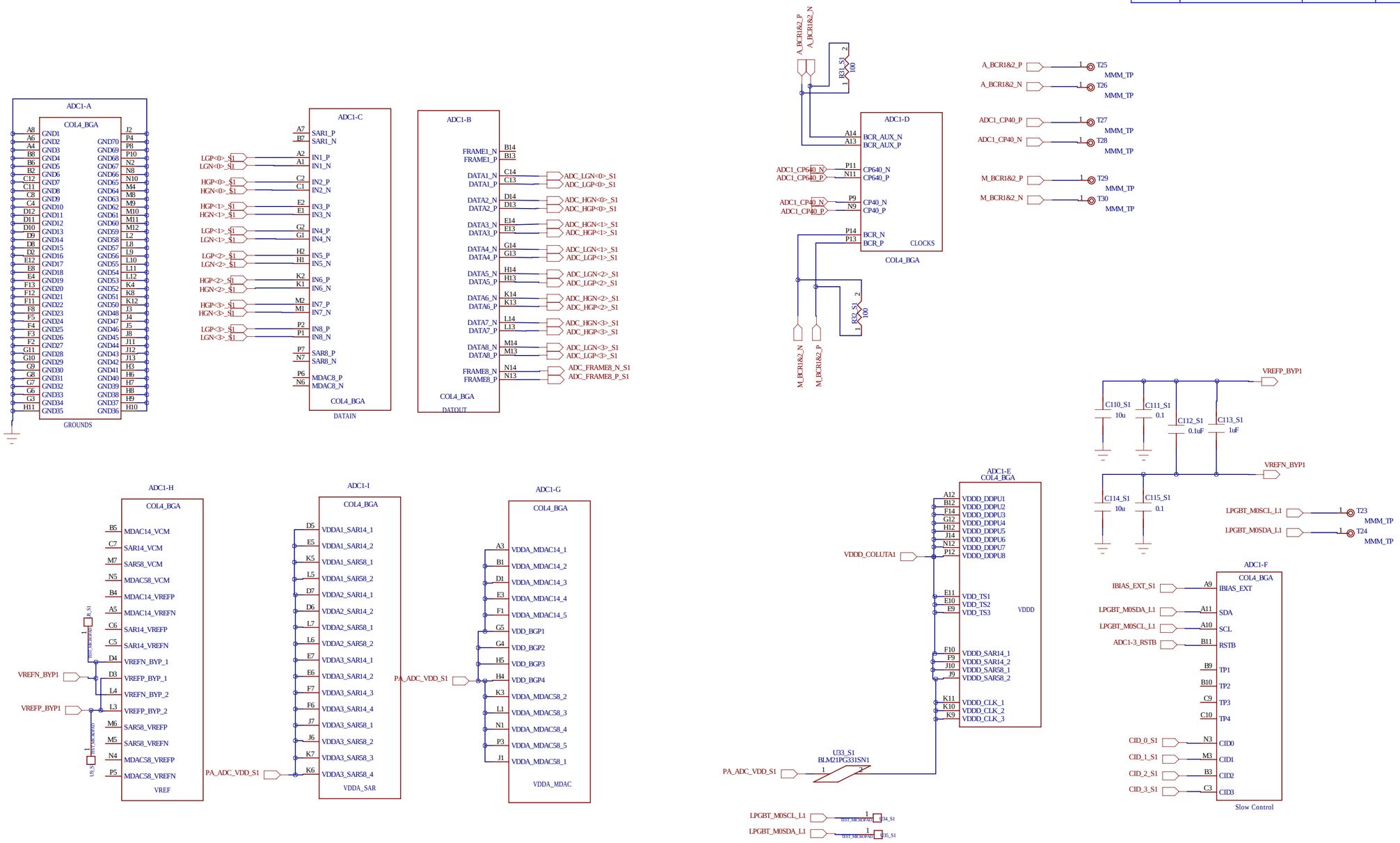

DRAWN: Jb	DATED: <Drawn Date>	COMPANY: Nevis Laboratories of Columbia University		
CHECKED: jb	DATED: <Checked Date>	TITLE: FEB2 prototype v2.0		
QUALITY CONTROL: jb	DATED: <QC Date>	CODE: jb2023	SIZE: C	DRAWING NO: 35 / REV: v2.0
RELEASED: jb	DATED: <Release Date>	SCALE: <Scale>	SHEET: 15 OF 155	

REVISION RECORD			
LTR	ECO NO:	APPROVED:	DATE:

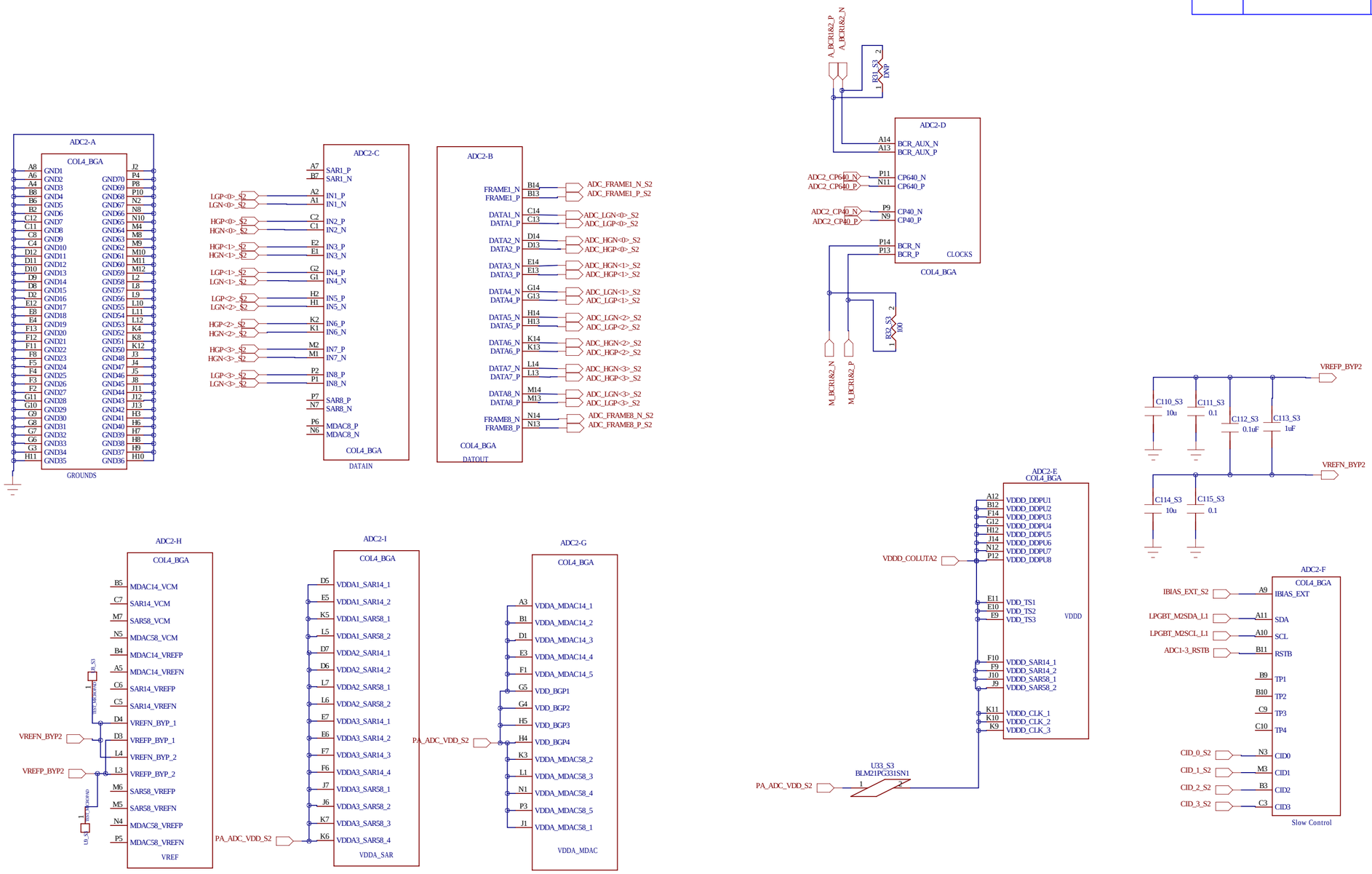

DRAWN: Jb	DATED: <Drawn Date>	COMPANY: Nevis Laboratories of Columbia University	
CHECKED: jb	DATED: <Checked Date>	TITLE: FEB2 prototype v2.0	
QUALITY CONTROL: jb	DATED: <QC Date>	CODE: jb2023 / SIZE: C / DRAWING NO: 35	REV: v2.0
RELEASED: jb	DATED: <Release Date>	SCALE: <Scale>	SHEET: 16 of 155

REVISION RECORD			
LTR	ECO NO:	APPROVED:	DATE:

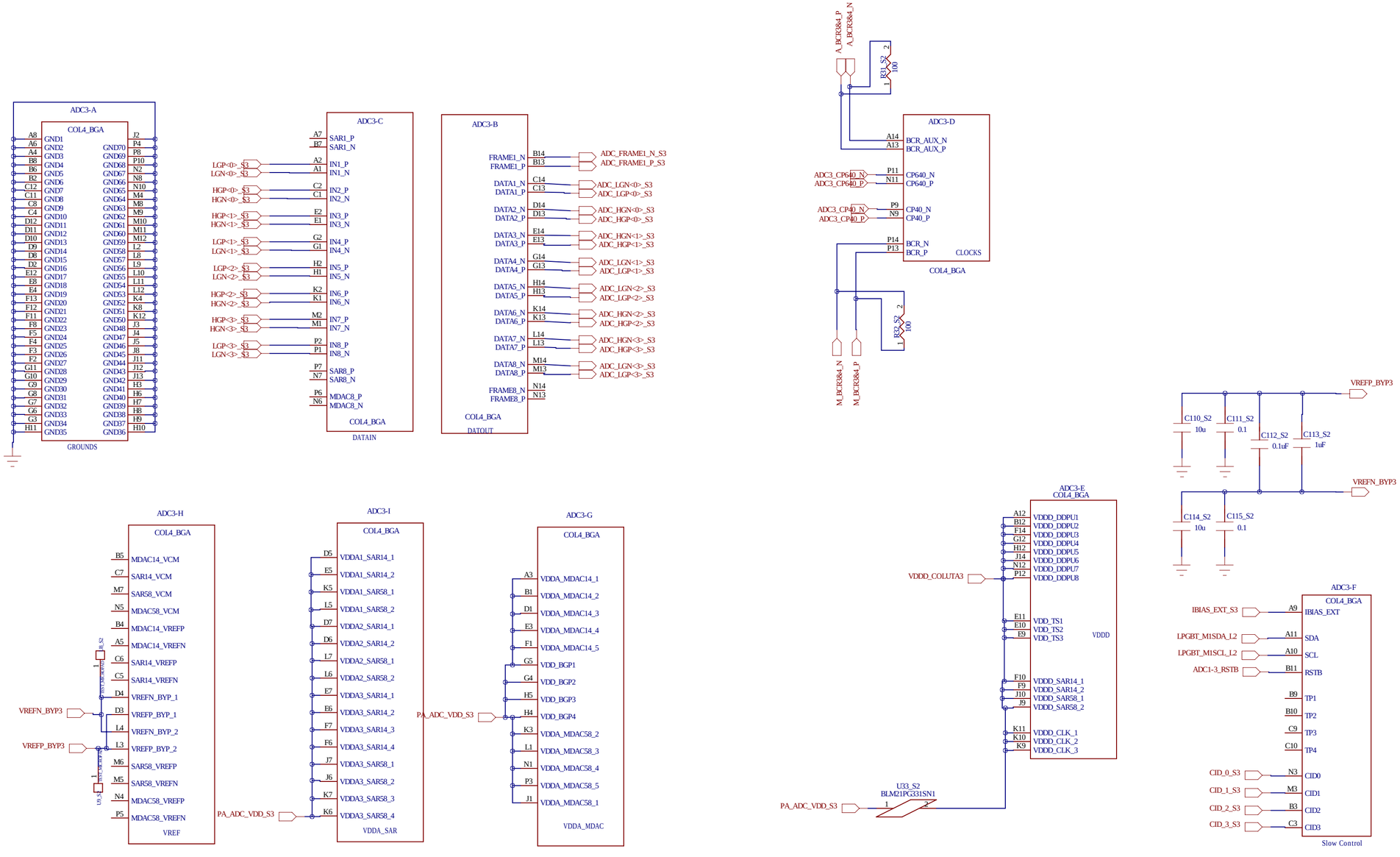

COMPANY: Nevis Laboratories of Columbia University			
TITLE: FEB2 prototype v2.0			
CODE: jb2023	SIZE: C	DRAWING NO: 35	REV: v2.0
SCALE: <Scale>		SHEET: 17 OF 155	

DRAWN: Jb	DATED: <Drawn Date>
CHECKED: jb	DATED: <Checked Date>
QUALITY CONTROL: jb	DATED: <QC Date>
RELEASED: jb	DATED: <Release Date>

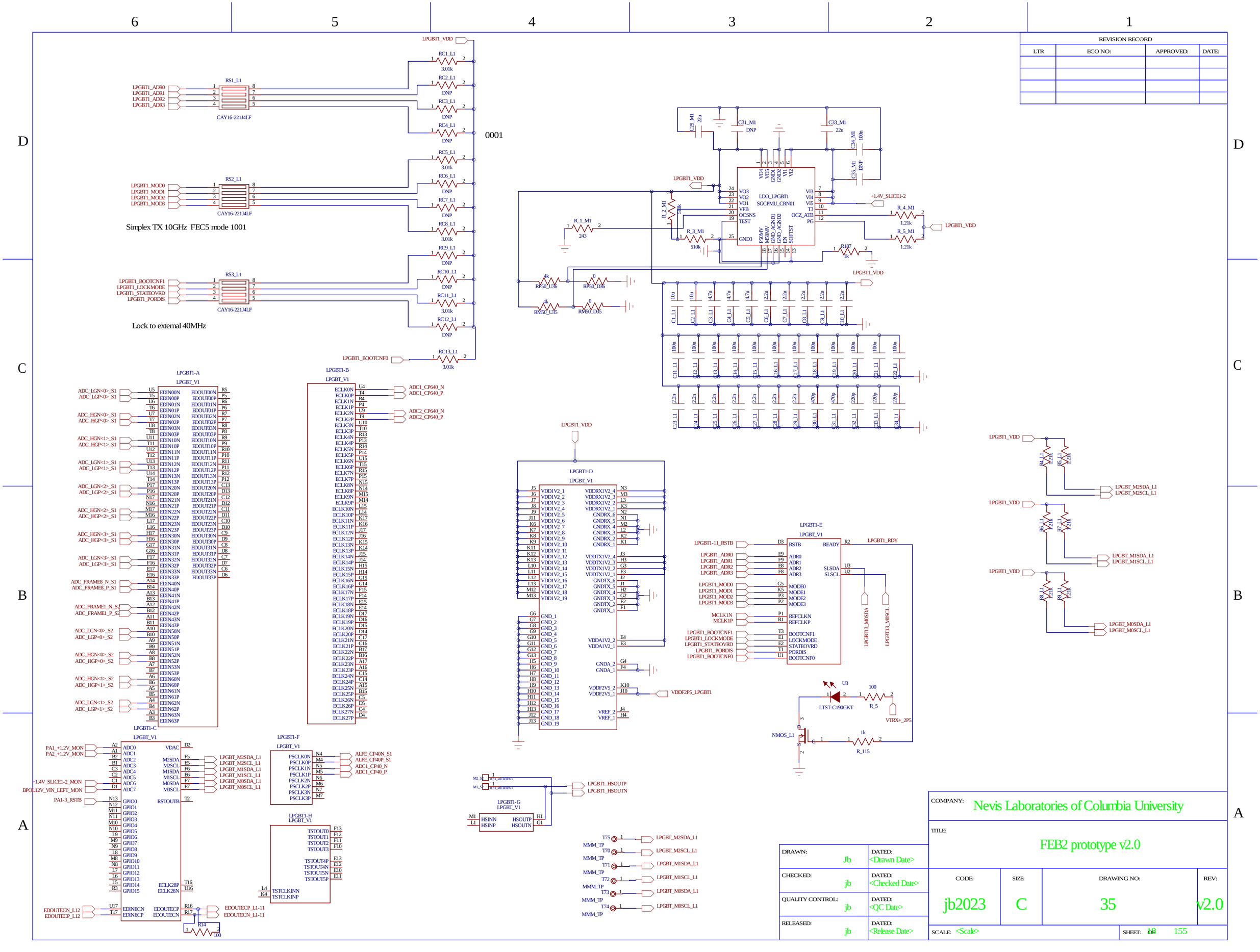
REVISION RECORD
LTR
ECO NO:
APPROVED:
DATE:
Simplex TX 10GHz FEC5 mode 1001
Lock to external 40MHz
0001
LPGBT1_VDD
LPGBT1_BOOTCNF0
RS1_L1
RS2_L1
RS3_L1
CAY16-221J4LF
LPGBT1-A
LPGBT1-B
LPGBT1-C
LPGBT1-D
LPGBT1-E
LPGBT1-F
LPGBT1-G
LPGBT1-H
LPGBT_V1
LDO_LPGBT1
SGCPMU_CRN01
+1.4V_SLICE1-2
LPGBT1_RDY
VDDF2P5_LPGBT1
LPGBT1_HSOUTP
LPGBT1_HSOUTN
LPGBT_M2SDA_L1
LPGBT_M2SCL_L1
LPGBT_M1SDA_L1
LPGBT_M1SCL_L1
LPGBT_M0SDA_L1
LPGBT_M0SCL_L1
ALFE_CP40N_S1
ALFE_CP40P_S1
ADC1_CP40_N
ADC1_CP40_P
ADC1_CP640_N
ADC1_CP640_P
ADC2_CP640_N
ADC2_CP640_P
EDOUTECP_L1-11
EDOUTECN_L1-11
VTRX+_2P5
COMPANY:
Nevis Laboratories of Columbia University
TITLE:
FEB2 prototype v2.0
DRAWN: Jb
DATED: <Drawn Date>
CHECKED: jb
DATED: <Checked Date>
QUALITY CONTROL: jb
DATED: <QC Date>
RELEASED: jb
DATED: <Release Date>
CODE: jb2023
SIZE: C
DRAWING NO: 35
REV: v2.0
SCALE: <Scale>
SHEET: 18 155

REVISION RECORD			
LTR	ECO NO:	APPROVED:	DATE:

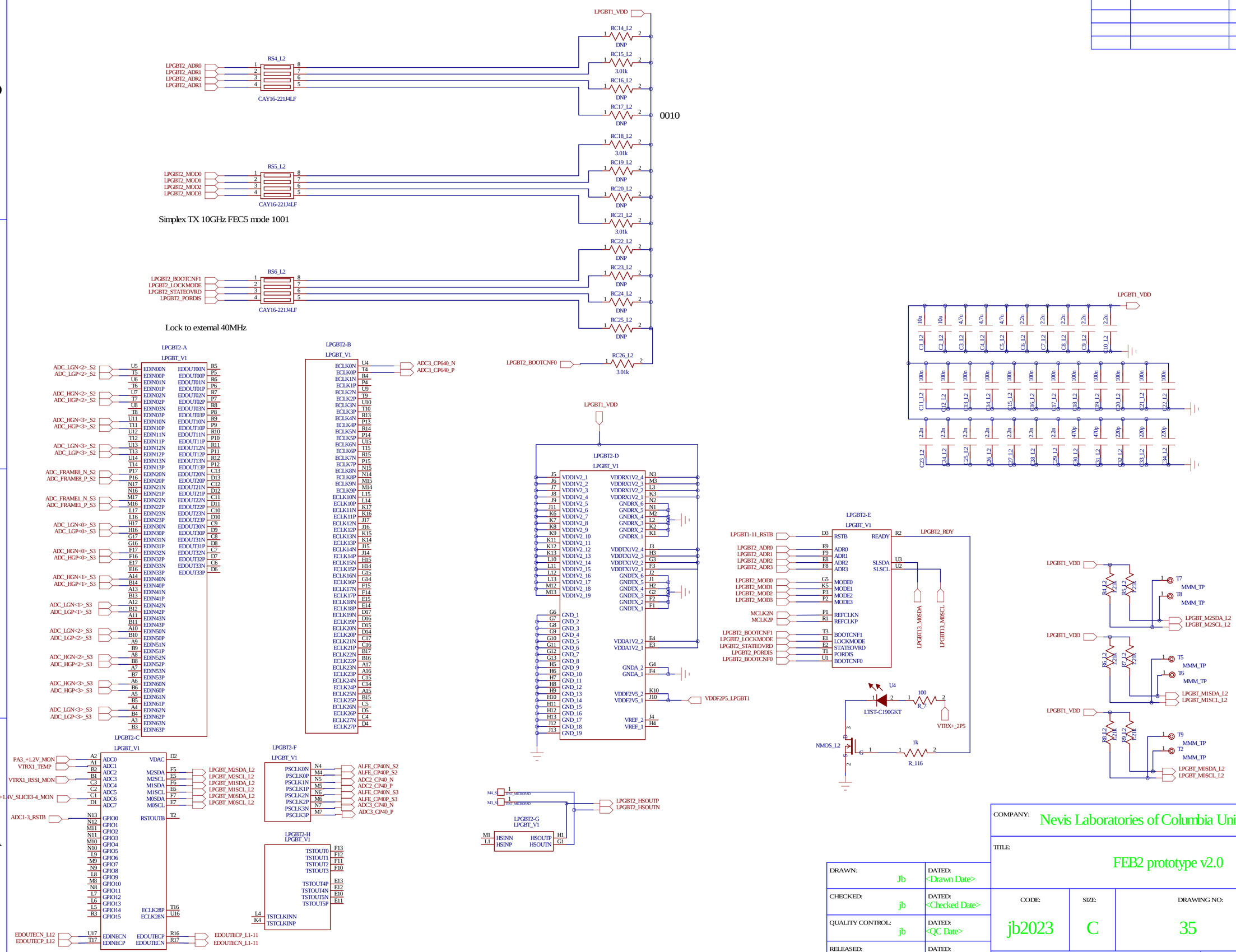

COMPANY: Nevis Laboratories of Columbia University			
TITLE: FEB2 prototype v2.0			
DRAWN: Jb	DATED: <Drawn Date>		
CHECKED: jb	DATED: <Checked Date>		
QUALITY CONTROL: jb	DATED: <QC Date>		
RELEASED: jb	DATED: <Release Date>		
CODE: jb2023	SIZE: C	DRAWING NO: 35	REV: v2.0
SCALE: <Scale>		SHEET: 10 OF 155	

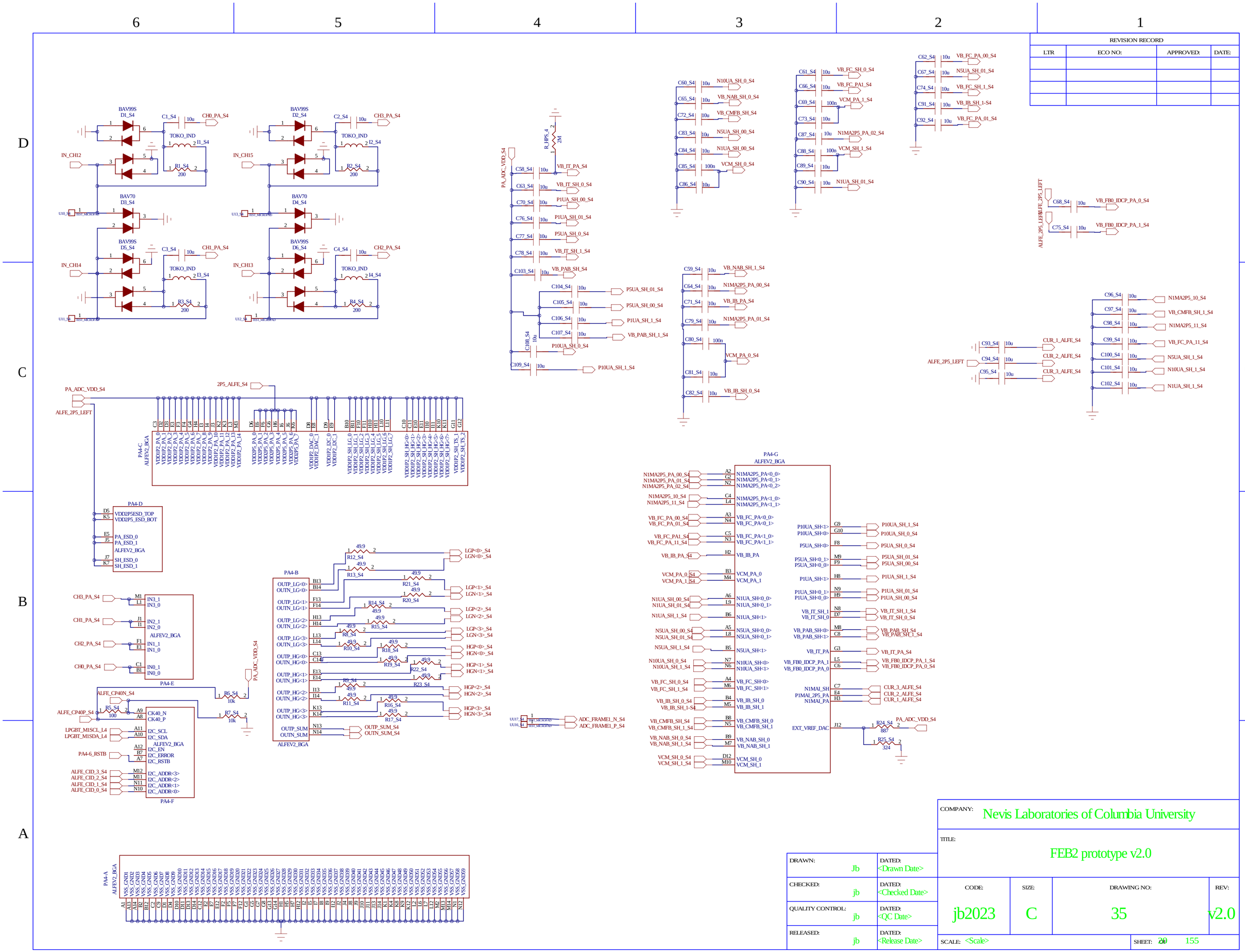
6
5
4
3
2
1
D
C
B
A
BAV99S D1_S4
BAV99S D2_S4
BAV70 D3_S4
BAV70 D4_S4
BAV99S D5_S4
BAV99S D6_S4
TOKO_IND
IN_CH12
IN_CH15
IN_CH14
IN_CH13
CH0_PA_S4
CH3_PA_S4
CH1_PA_S4
CH2_PA_S4
PA_ADC_VDD_S4
ALFE_2P5_LEFT
2P5_ALFE_S4
PA4-C ALFEV2_BGA
PA4-D
PA4-E
PA4-F
PA4-G ALFEV2_BGA
PA4-B
PA4-A ALFEV2_BGA
REVISION RECORD
LTR
ECO NO:
APPROVED:
DATE:
COMPANY:
Nevis Laboratories of Columbia University
TITLE:
FEB2 prototype v2.0
DRAWN:
Jb
DATED:
<Drawn Date>
CHECKED:
jb
DATED:
<Checked Date>
QUALITY CONTROL:
jb
DATED:
<QC Date>
RELEASED:
jb
DATED:
<Release Date>
CODE:
jb2023
SIZE:
C
DRAWING NO:
35
REV:
v2.0
SCALE:
<Scale>
SHEET:
20
155

REVISION RECORD			
LTR	ECO NO:	APPROVED:	DATE:

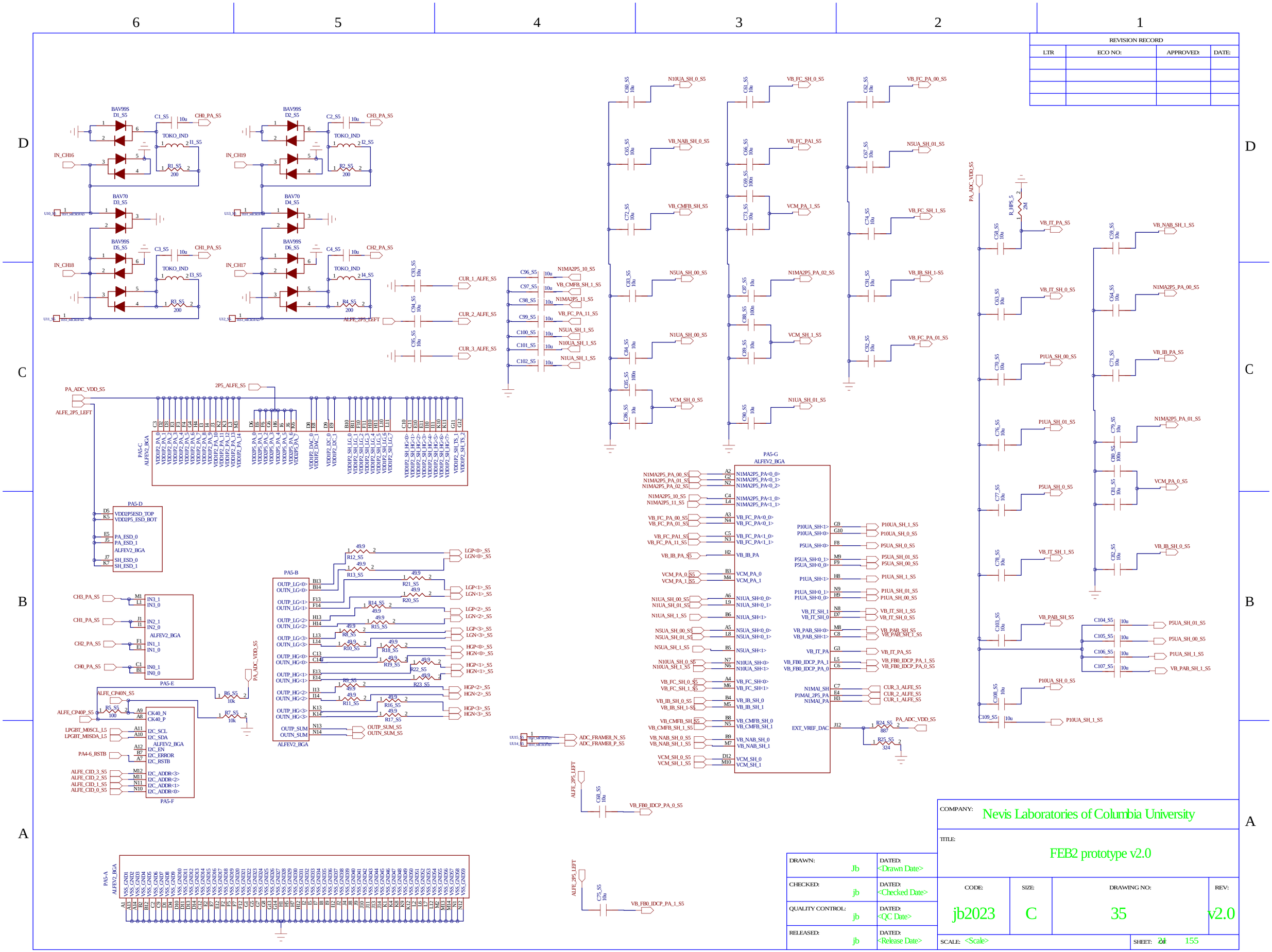

DRAWN: Jb	DATED: <Drawn Date>	COMPANY: Nevis Laboratories of Columbia University	
CHECKED: jb	DATED: <Checked Date>	TITLE: FEB2 prototype v2.0	
QUALITY CONTROL: jb	DATED: <QC Date>	CODE: jb2023	SIZE: C
RELEASED: jb	DATED: <Release Date>	DRAWING NO: 35	REV: v2.0
		SCALE: <Scale>	SHEET: 24 OF 155

REVISION RECORD			
LTR	ECO NO:	APPROVED:	DATE:

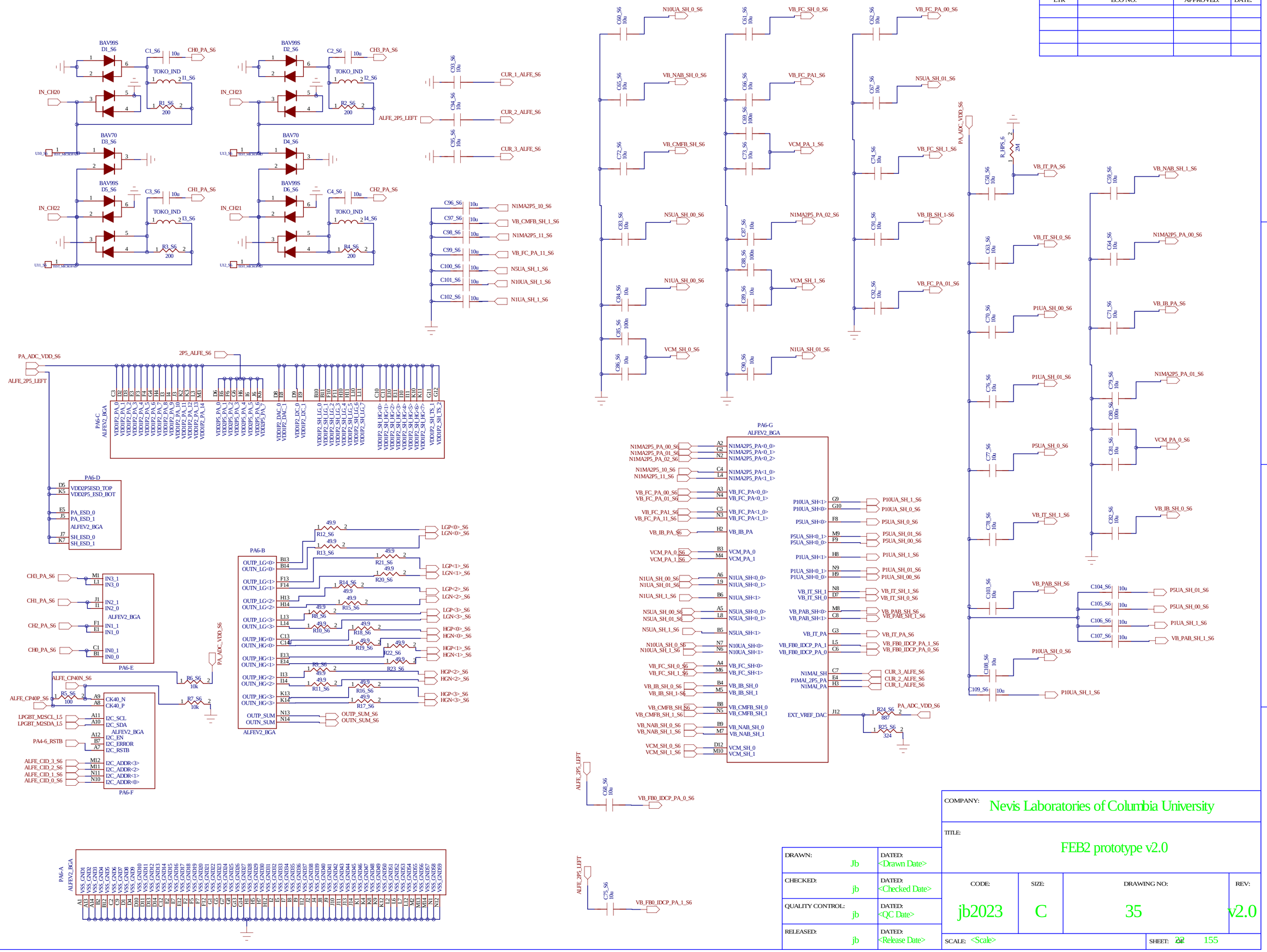

DRAWN: Jb	DATED: <Drawn Date>	COMPANY: Nevis Laboratories of Columbia University	
CHECKED: jb	DATED: <Checked Date>	TITLE: FEB2 prototype v2.0	
QUALITY CONTROL: jb	DATED: <QC Date>	CODE: jb2023 / SIZE: C / DRAWING NO: 35	REV: v2.0
RELEASED: jb	DATED: <Release Date>	SCALE: <Scale>	SHEET: 22 OF 155

REVISION RECORD			
LTR	ECO NO:	APPROVED:	DATE:

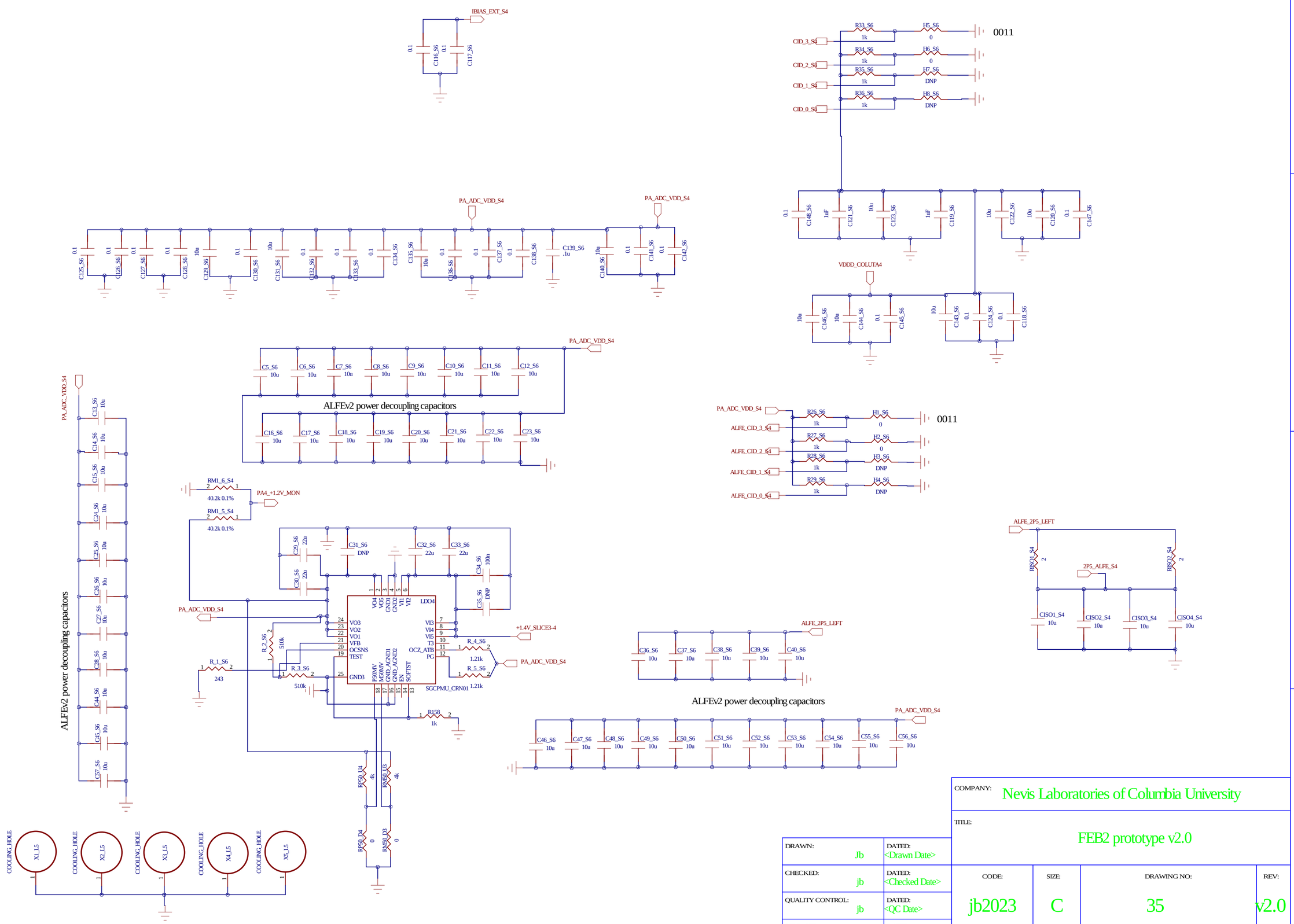

DRAWN: Jb	DATED: <Drawn Date>	COMPANY: Nevis Laboratories of Columbia University	
CHECKED: jb	DATED: <Checked Date>	TITLE: FEB2 prototype v2.0	
QUALITY CONTROL: jb	DATED: <QC Date>	CODE: jb2023	SIZE: C
RELEASED: jb	DATED: <Release Date>	DRAWING NO: 35	REV: v2.0
		SCALE: <Scale>	SHEET: 23 OF 155

REVISION RECORD			
LTR	ECO NO:	APPROVED:	DATE:

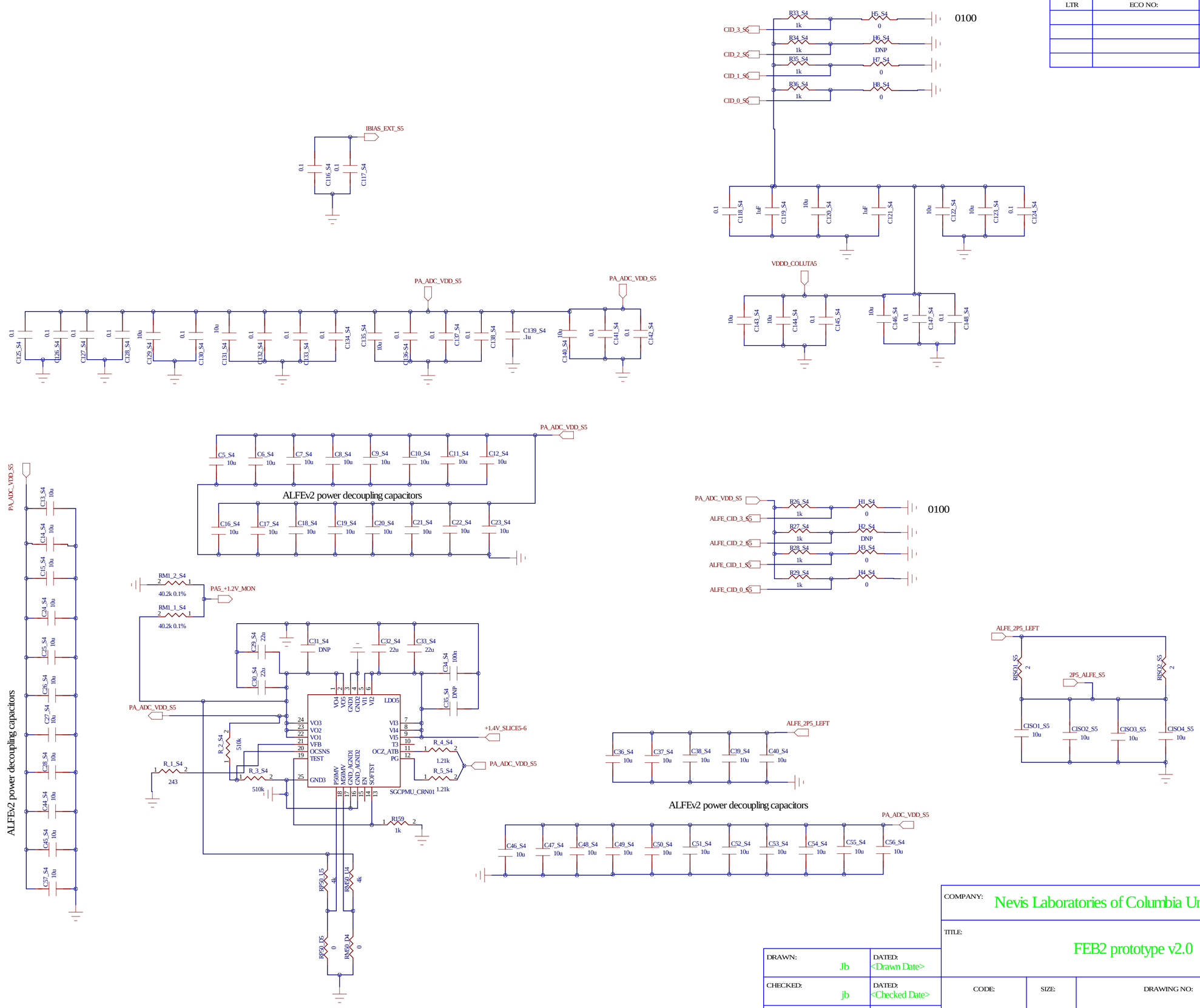

DRAWN: Jb	DATED: <Drawn Date>	COMPANY: Nevis Laboratories of Columbia University	
CHECKED: jb	DATED: <Checked Date>	TITLE: FEB2 prototype v2.0	
QUALITY CONTROL: jb	DATED: <QC Date>	CODE: jb2023 / SIZE: C / DRAWING NO: 35	REV: v2.0
RELEASED: jb	DATED: <Release Date>	SCALE: <Scale>	SHEET: 24 OF 155

REVISION RECORD			
LTR	ECO NO:	APPROVED:	DATE:

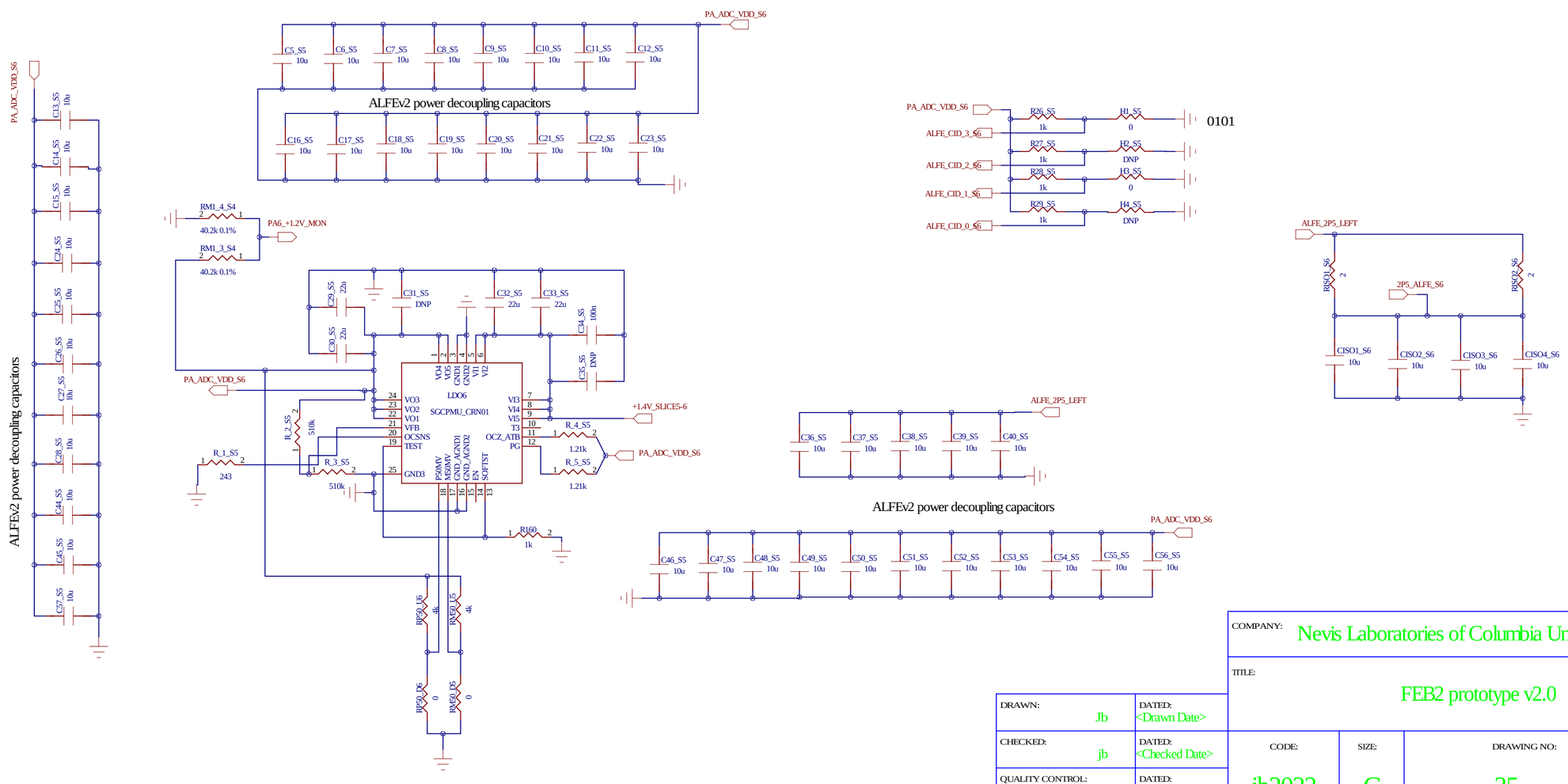

DRAWN: Jb	DATED: <Drawn Date>	COMPANY: Nevis Laboratories of Columbia University	
CHECKED: jb	DATED: <Checked Date>	TITLE: FEB2 prototype v2.0	
QUALITY CONTROL: jb	DATED: <QC Date>	CODE: jb2023 / SIZE: C	DRAWING NO: 35 / REV: v2.0
RELEASED: jb	DATED: <Release Date>	SCALE: <Scale>	SHEET: 25 OF 155

REVISION RECORD			
LTR	ECO NO:	APPROVED:	DATE:

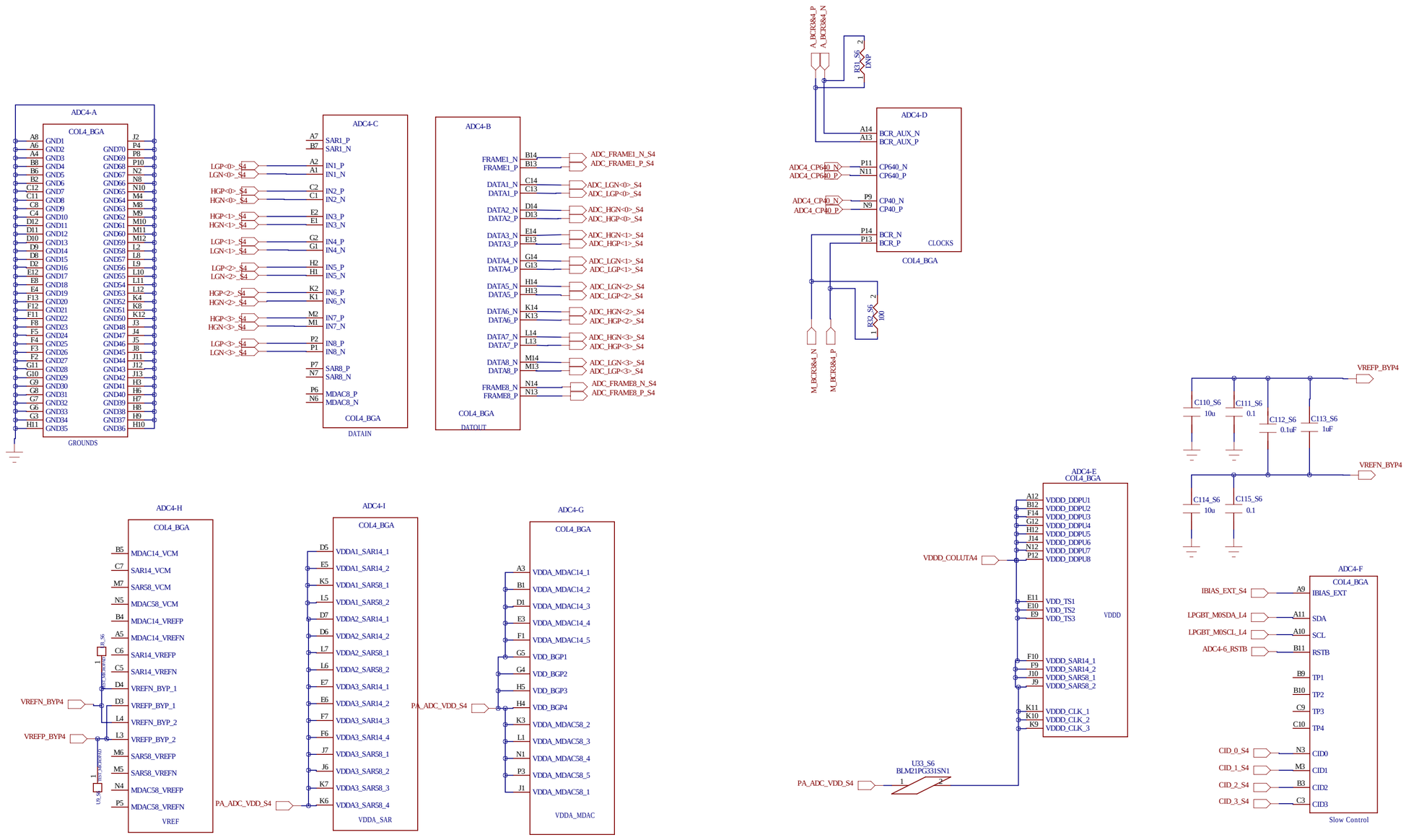

COMPANY: Nevis Laboratories of Columbia University					
TITLE: FEB2 prototype v2.0					
DRAWN: Jb	DATED: <Drawn Date>	CODE: jb2023	SIZE: C	DRAWING NO: 35	REV: v2.0
CHECKED: jb	DATED: <Checked Date>				
QUALITY CONTROL: jb	DATED: <QC Date>				
RELEASED: jb	DATED: <Release Date>	SCALE: <Scale>		SHEET: 26 155	

REVISION RECORD			
LTR	ECO NO:	APPROVED:	DATE:

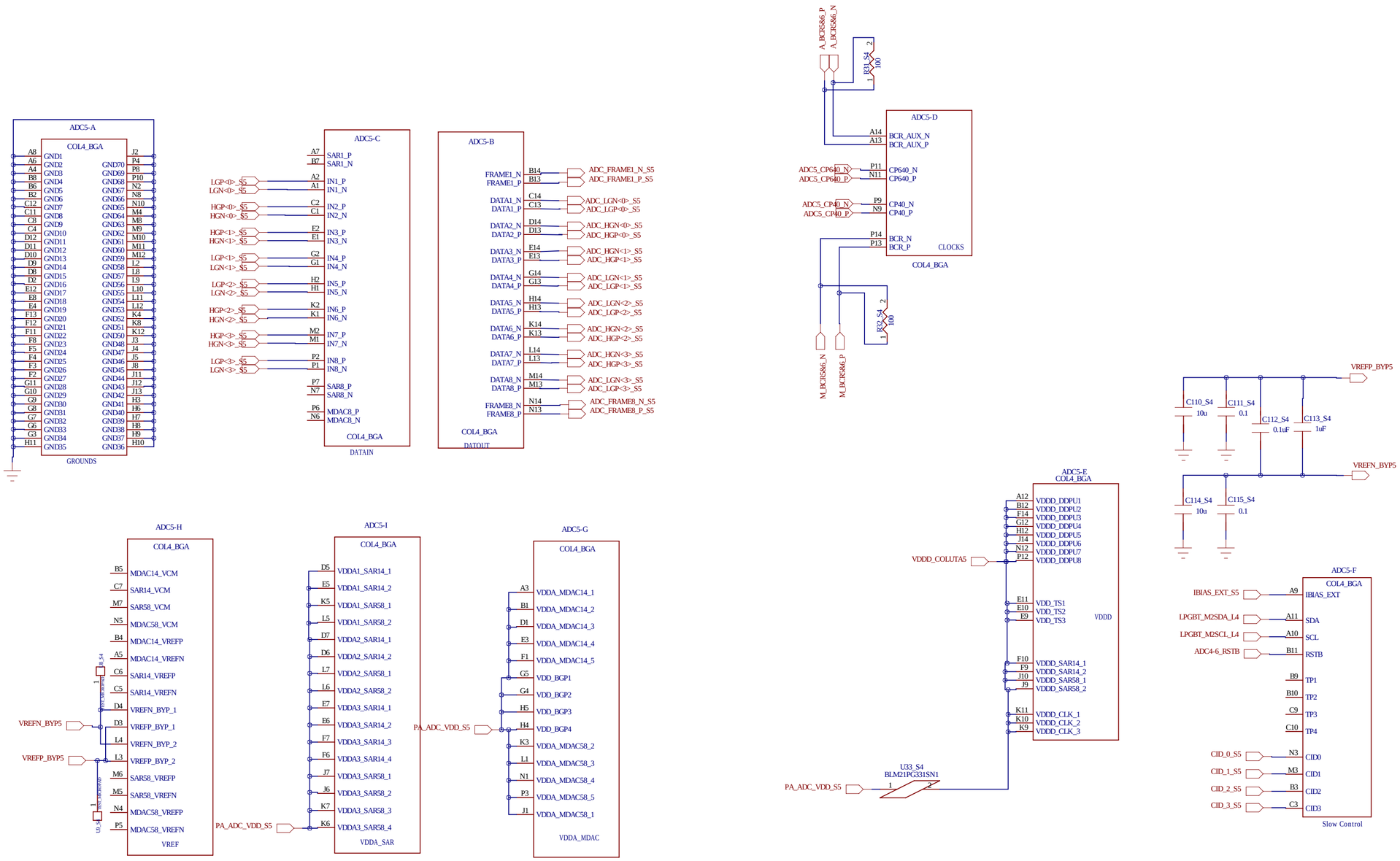

DRAWN: Jb	DATED: <Drawn Date>	COMPANY: Nevis Laboratories of Columbia University	
CHECKED: jb	DATED: <Checked Date>	TITLE: FEB2 prototype v2.0	
QUALITY CONTROL: jb	DATED: <QC Date>	CODE: jb2023	SIZE: C
RELEASED: jb	DATED: <Release Date>	DRAWING NO: 35	REV: v2.0
		SCALE: <Scale>	SHEET: 27 OF 155

REVISION RECORD			
LTR	ECO NO:	APPROVED:	DATE:

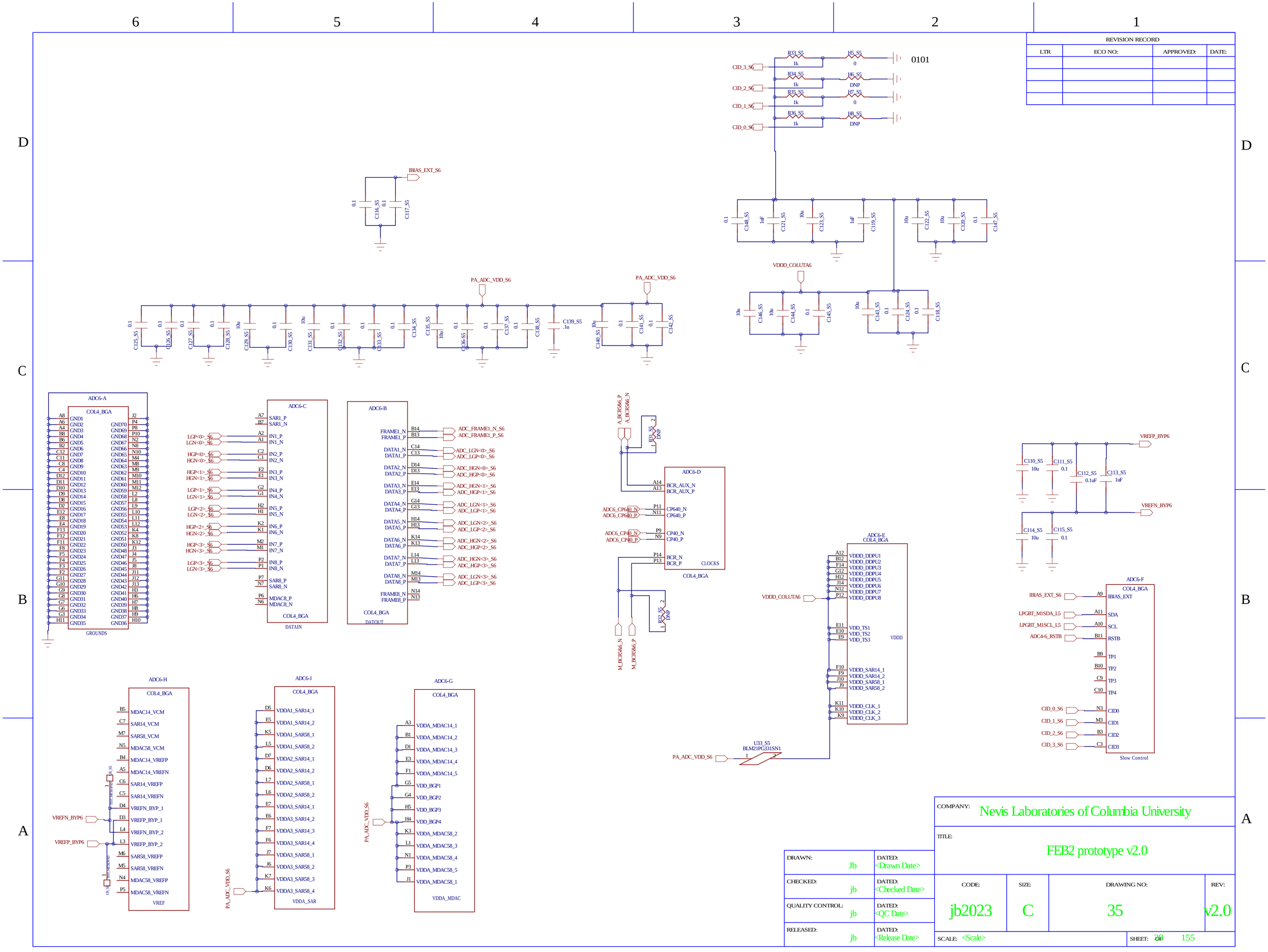

DRAWN: Jb	DATED: <Drawn Date>	COMPANY: Nevis Laboratories of Columbia University			
CHECKED: jb	DATED: <Checked Date>	TITLE: FEB2 prototype v2.0			
QUALITY CONTROL: jb	DATED: <QC Date>	CODE: jb2023	SIZE: C	DRAWING NO: 35	REV: v2.0
RELEASED: jb	DATED: <Release Date>	SCALE: <Scale>		SHEET: 28 OF 155	

REVISION RECORD			
LTR	ECO NO:	APPROVED:	DATE:

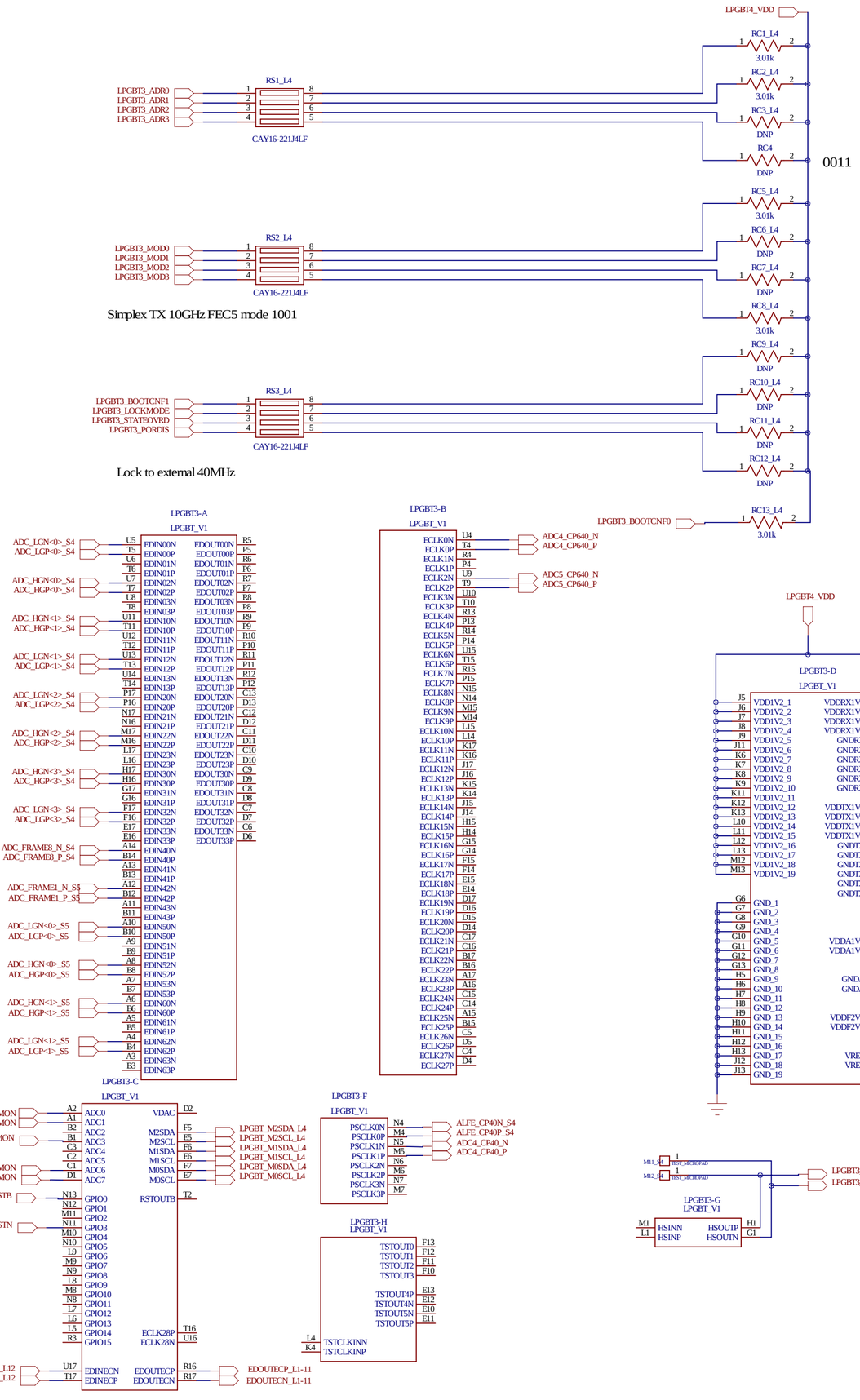

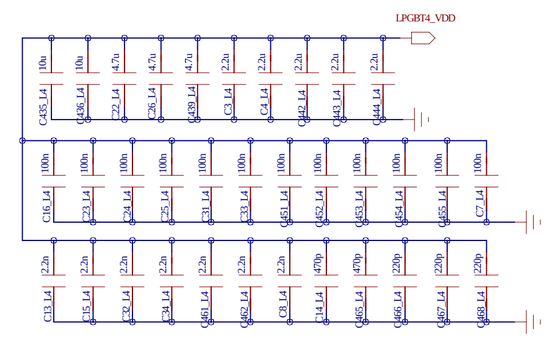

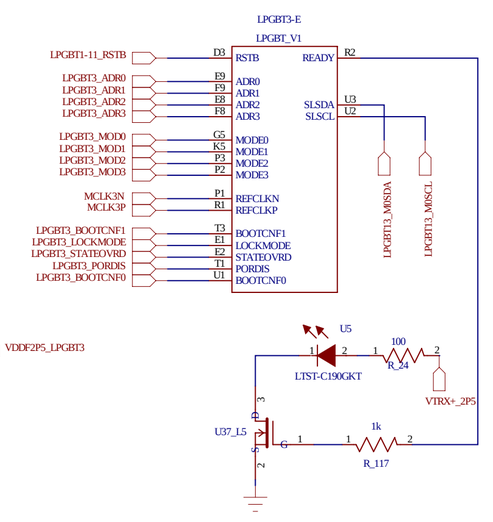

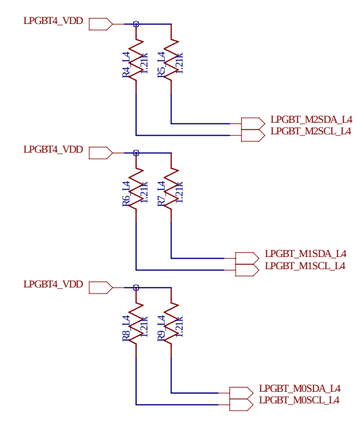

COMPANY: Nevis Laboratories of Columbia University			
TITLE: FEB2 prototype v2.0			
DRAWN: Jb	DATED: <Drawn Date>		
CHECKED: jb	DATED: <Checked Date>		
QUALITY CONTROL: jb	DATED: <QC Date>		
RELEASED: jb	DATED: <Release Date>		
CODE: jb2023	SIZE: C	DRAWING NO: 35	REV: v2.0
SCALE: <Scale>		SHEET: 29 OF 155	

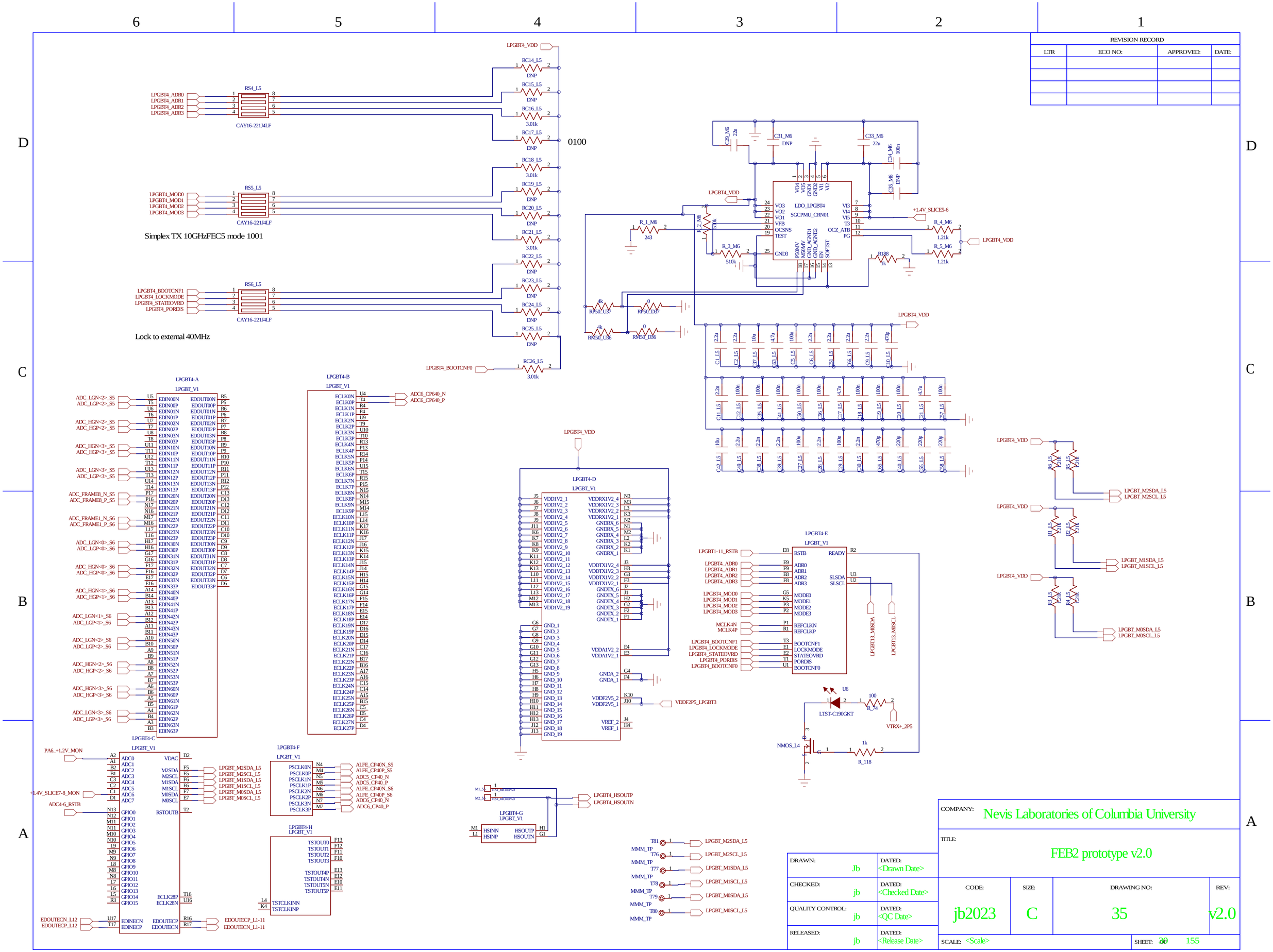
REVISION RECORD
LTR
ECO NO:
APPROVED:
DATE:
LPGBT4_VDD
RS4_L5
LPGBT4_ADR0
LPGBT4_ADR1
LPGBT4_ADR2
LPGBT4_ADR3
CAY16-221J4LF
RS5_L5
LPGBT4_MOD0
LPGBT4_MOD1
LPGBT4_MOD2
LPGBT4_MOD3
Simplex TX 10GHzFEC5 mode 1001
RS6_L5
LPGBT4_BOOTCNF1
LPGBT4_LOCKMODE
LPGBT4_STATEOVRD
LPGBT4_PORDIS
Lock to external 40MHz
LPGBT4_BOOTCNF0
0100
LDO_LPGBT4
SGCPMU_CRN01
+1.4V_SLICE5-6
LPGBT4-A
LPGBT4-B
LPGBT4-C
LPGBT4-D
LPGBT4-E
LPGBT4-F
LPGBT4-G
LPGBT4-H
LPGBT_V1
ADC6_CP640_N
ADC6_CP640_P
VDDF2P5_LPGBT3
LPGBT1-11_RSTB
LPGBT3_M0SDA
LPGBT3_M0SCL
LPGBT_M2SDA_L5
LPGBT_M2SCL_L5
LPGBT_M1SDA_L5
LPGBT_M1SCL_L5
LPGBT_M0SDA_L5
LPGBT_M0SCL_L5
LTST-C190GKT
VTRX+_2P5
NMOS_L4
PA6_+1.2V_MON
+1.4V_SLICE7-8_MON
ADC4-6_RSTB
EDOUTECN_L12
EDOUTECP_L12
EDOUTECP_L1-11
EDOUTECN_L1-11
LPGBT4_HSOUTP
LPGBT4_HSOUTN
ALFE_CP40N_S5
ALFE_CP40P_S5
ADC5_CP40_N
ADC5_CP40_P
ALFE_CP40N_S6
ALFE_CP40P_S6
ADC6_CP40_N
ADC6_CP40_P
MMM_TP
COMPANY:
Nevis Laboratories of Columbia University
TITLE:
FEB2 prototype v2.0
DRAWN:
Jb
DATED:
<Drawn Date>
CHECKED:
jb
DATED:
<Checked Date>
QUALITY CONTROL:
jb
DATED:
<QC Date>
RELEASED:
jb
DATED:
<Release Date>
CODE:
jb2023
SIZE:
C
DRAWING NO:
35
REV:
v2.0
SCALE:
<Scale>
SHEET:
30
155

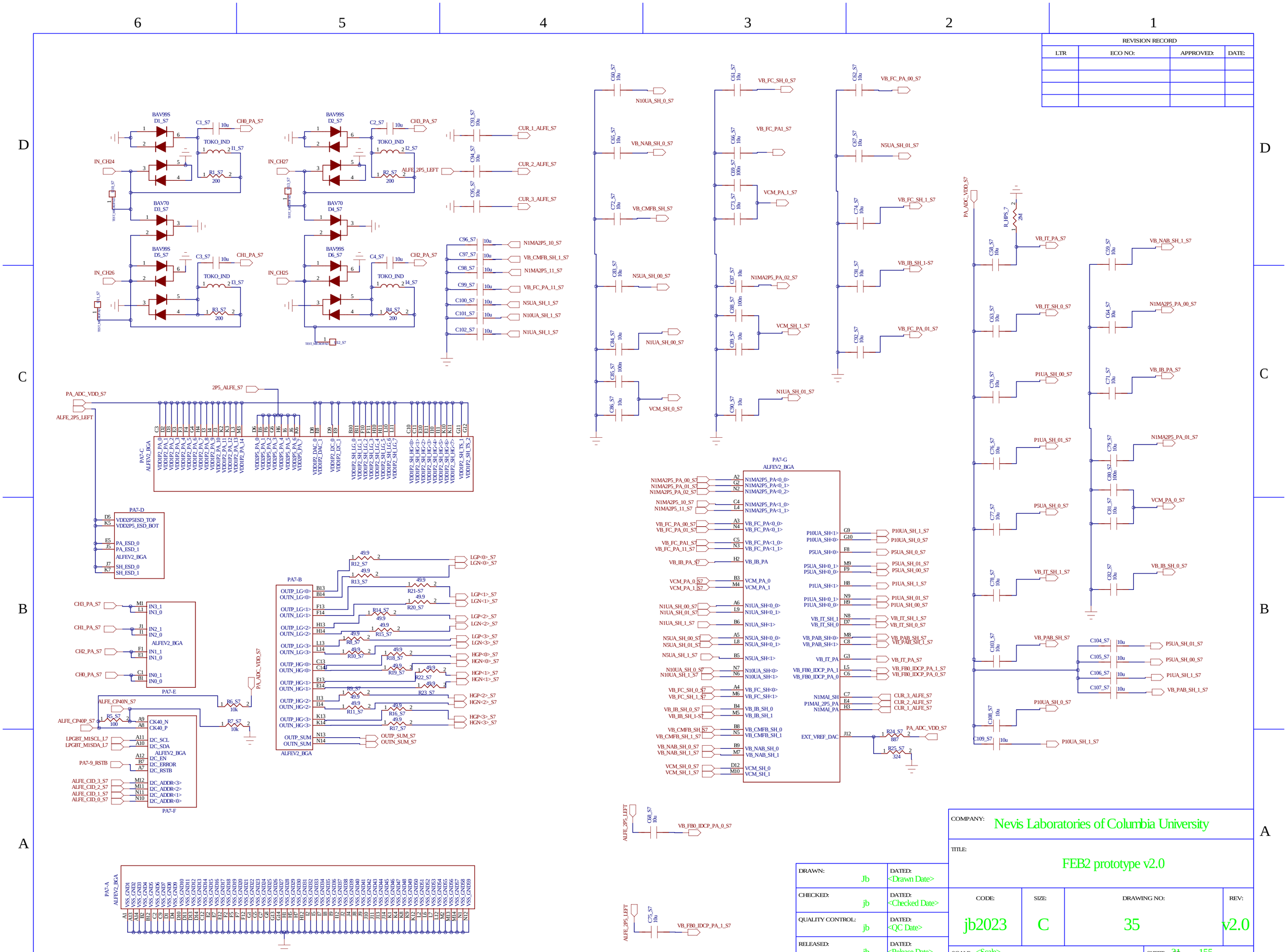

COMPANY:	Nevis Laboratories of Columbia University		
TITLE:	FEB2 prototype v2.0		
DRAWN: Jb	DATED: <Drawn Date>		
CHECKED: jb	DATED: <Checked Date>		
QUALITY CONTROL: jb	DATED: <QC Date>		
RELEASED: jb	DATED: <Release Date>		
CODE: jb2023	SIZE: C	DRAWING NO: 35	REV: v2.0
SCALE: <Scale>	SHEET: 21 OF 155		

REVISION RECORD			
LTR	ECO NO:	APPROVED:	DATE:

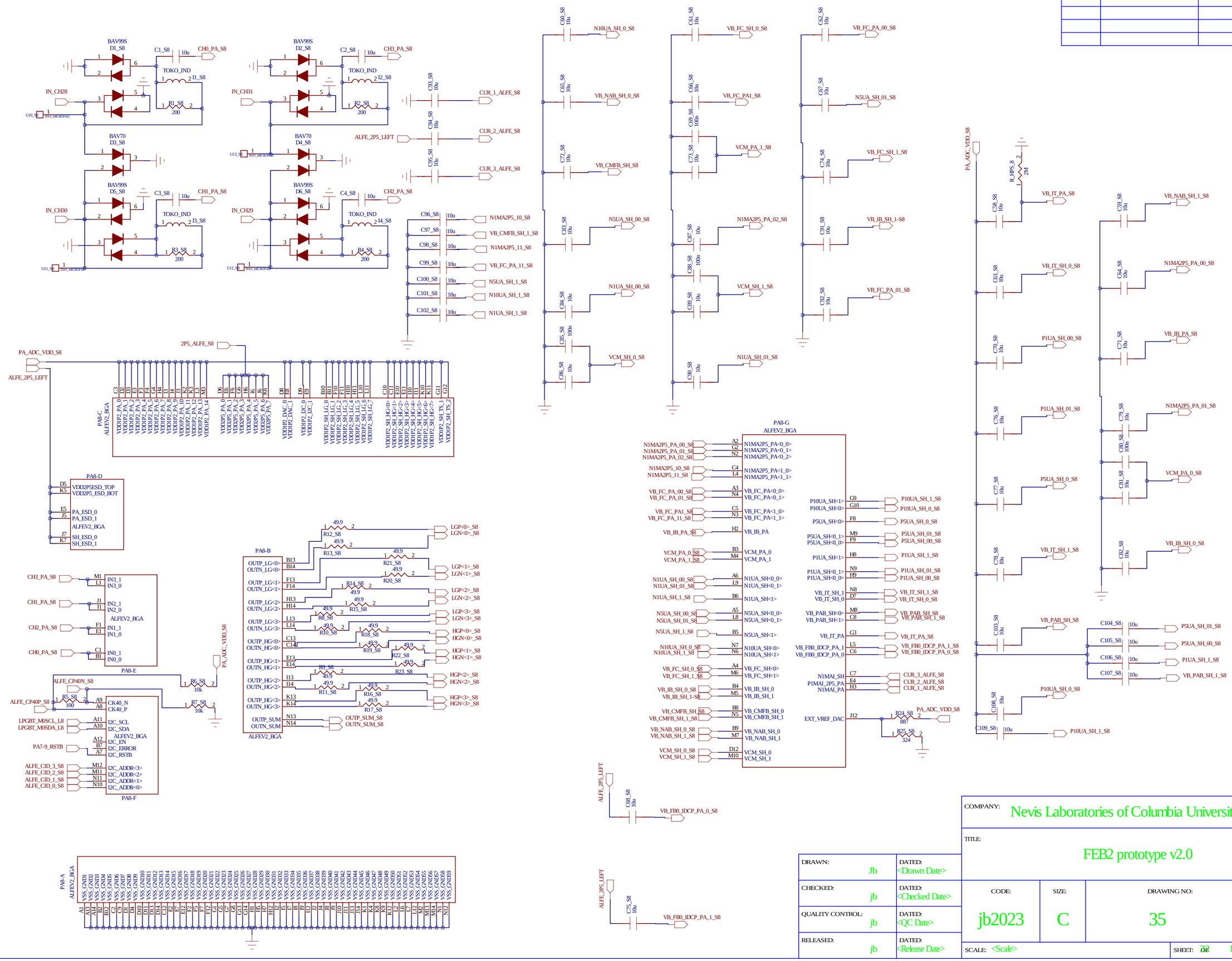

DRAWN: Jb	DATED: <Drawn Date>	COMPANY: Nevis Laboratories of Columbia University	
CHECKED: jb	DATED: <Checked Date>	TITLE: FEB2 prototype v2.0	
QUALITY CONTROL: jb	DATED: <QC Date>	CODE: jb2023	SIZE: C
RELEASED: jb	DATED: <Release Date>	DRAWING NO: 35	REV: v2.0
		SCALE: <Scale>	SHEET: 32 OF 155

REVISION RECORD			
LTR	ECO NO:	APPROVED:	DATE:

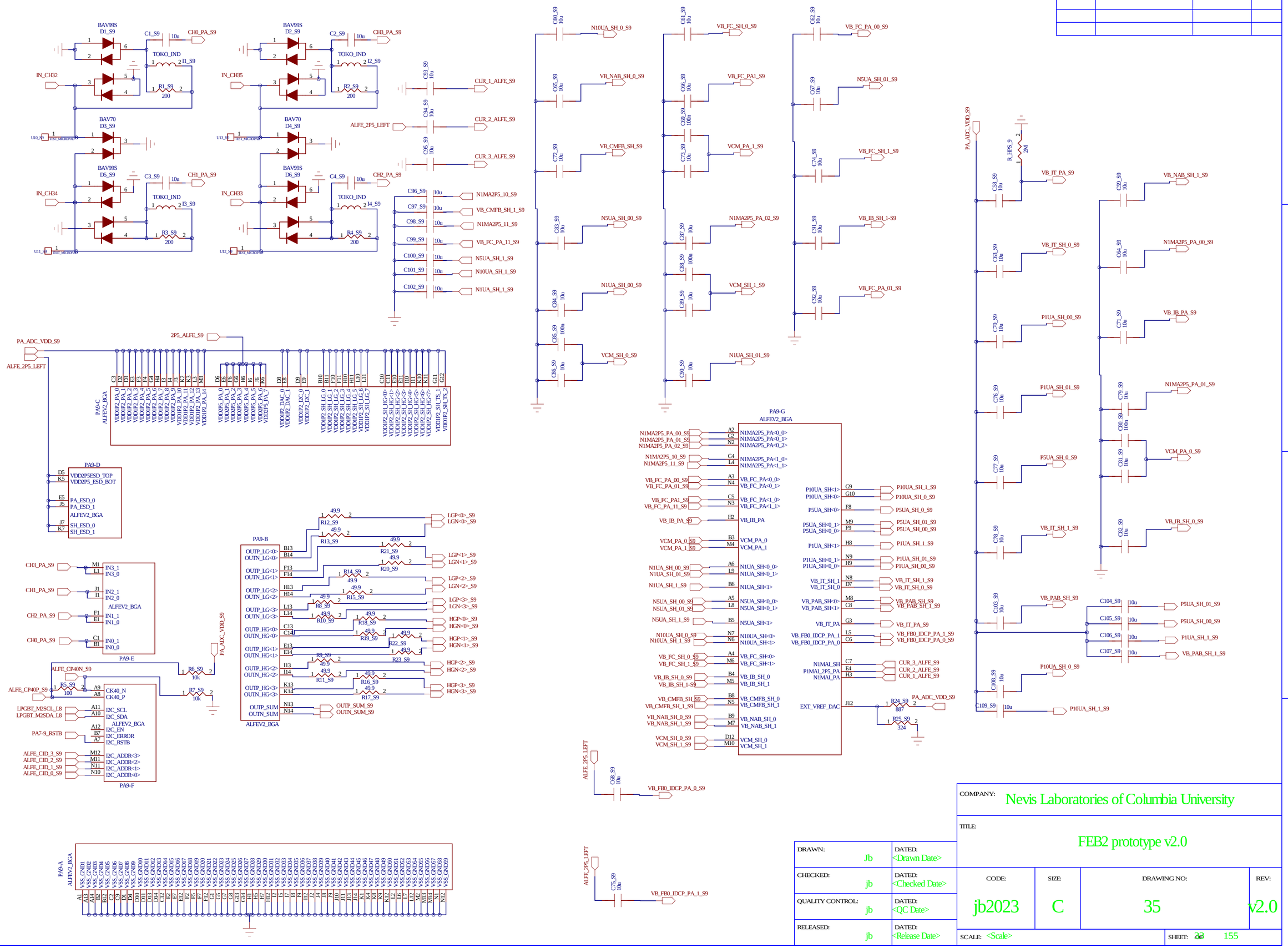

DRAWN: Jb	DATED: <Drawn Date>	COMPANY: Nevis Laboratories of Columbia University	
CHECKED: jb	DATED: <Checked Date>	TITLE: FEB2 prototype v2.0	
QUALITY CONTROL: jb	DATED: <QC Date>	CODE: jb2023	SIZE: C
RELEASED: jb	DATED: <Release Date>	DRAWING NO: 35	REV: v2.0
		SCALE: <Scale>	SHEET: 22 OF 155

REVISION RECORD			
LTR	ECO NO:	APPROVED:	DATE:

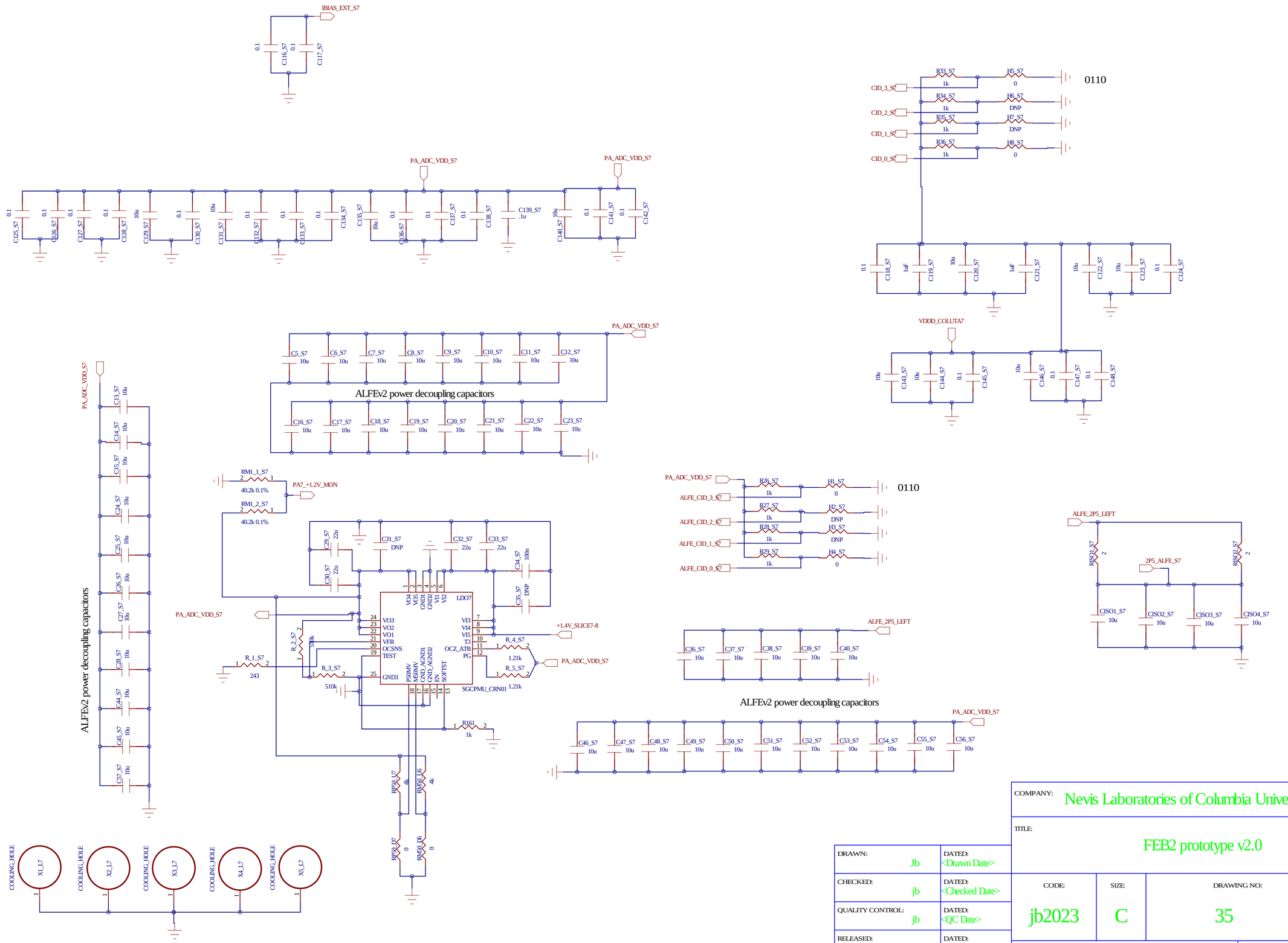

DRAWN: Jb	DATED: <Drawn Date>	COMPANY: Nevis Laboratories of Columbia University	
CHECKED: jb	DATED: <Checked Date>	TITLE: FEB2 prototype v2.0	
QUALITY CONTROL: jb	DATED: <QC Date>	CODE: jb2023	SIZE: C
RELEASED: jb	DATED: <Release Date>	DRAWING NO: 35	REV: v2.0
		SCALE: <Scale>	SHEET: 24 OF 155

REVISION RECORD			
LTR	ECO NO:	APPROVED:	DATE:

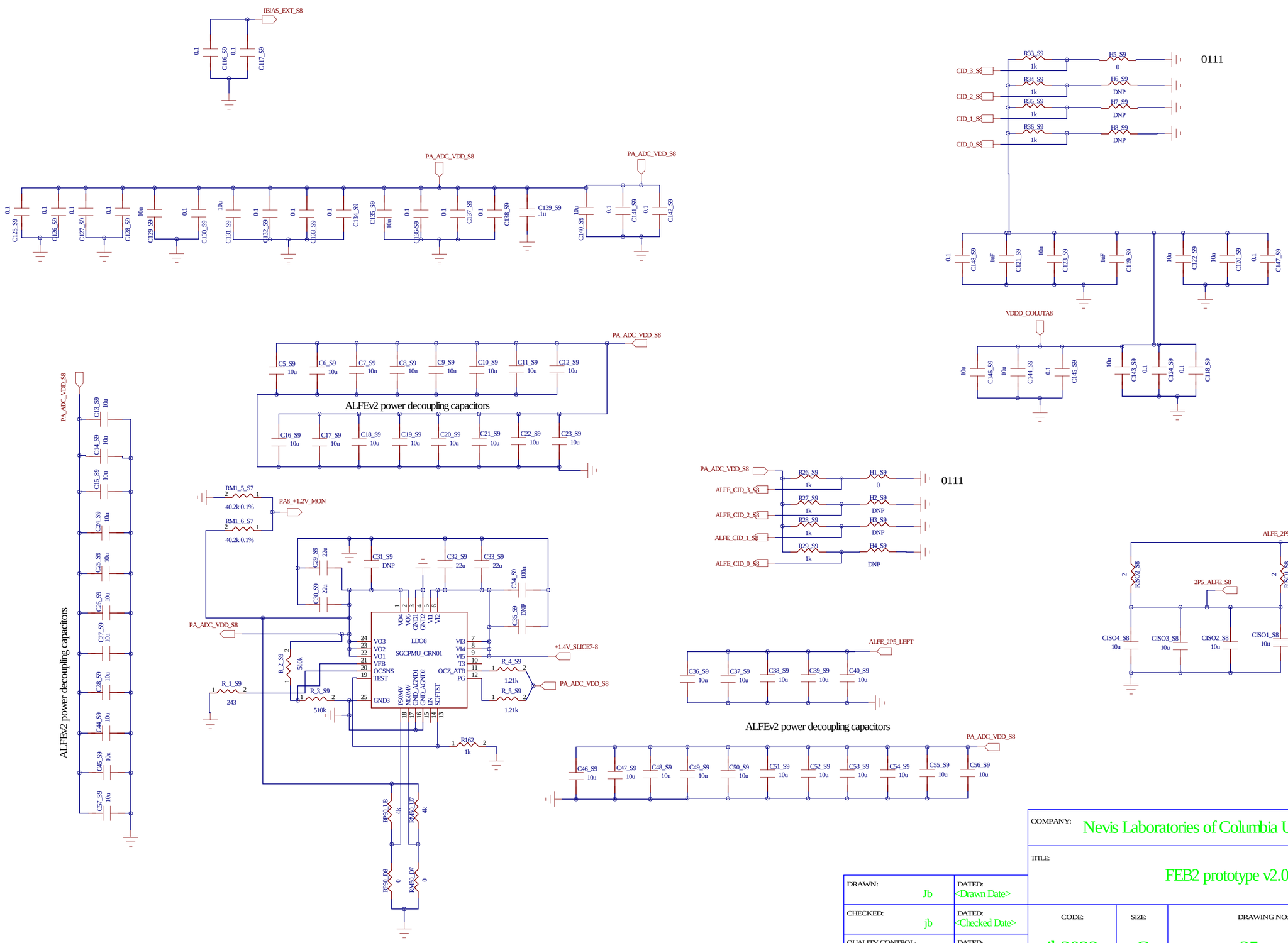

COMPANY: Nevis Laboratories of Columbia University			
TITLE: FEB2 prototype v2.0			
DRAWN: Jb	DATED: <Drawn Date>		
CHECKED: jb	DATED: <Checked Date>		
QUALITY CONTROL: jb	DATED: <QC Date>		
RELEASED: jb	DATED: <Release Date>		
CODE: jb2023	SIZE: C	DRAWING NO: 35	REV: v2.0
SCALE: <Scale>		SHEET: 35 OF 155	

REVISION RECORD			
LTR	ECO NO:	APPROVED:	DATE:

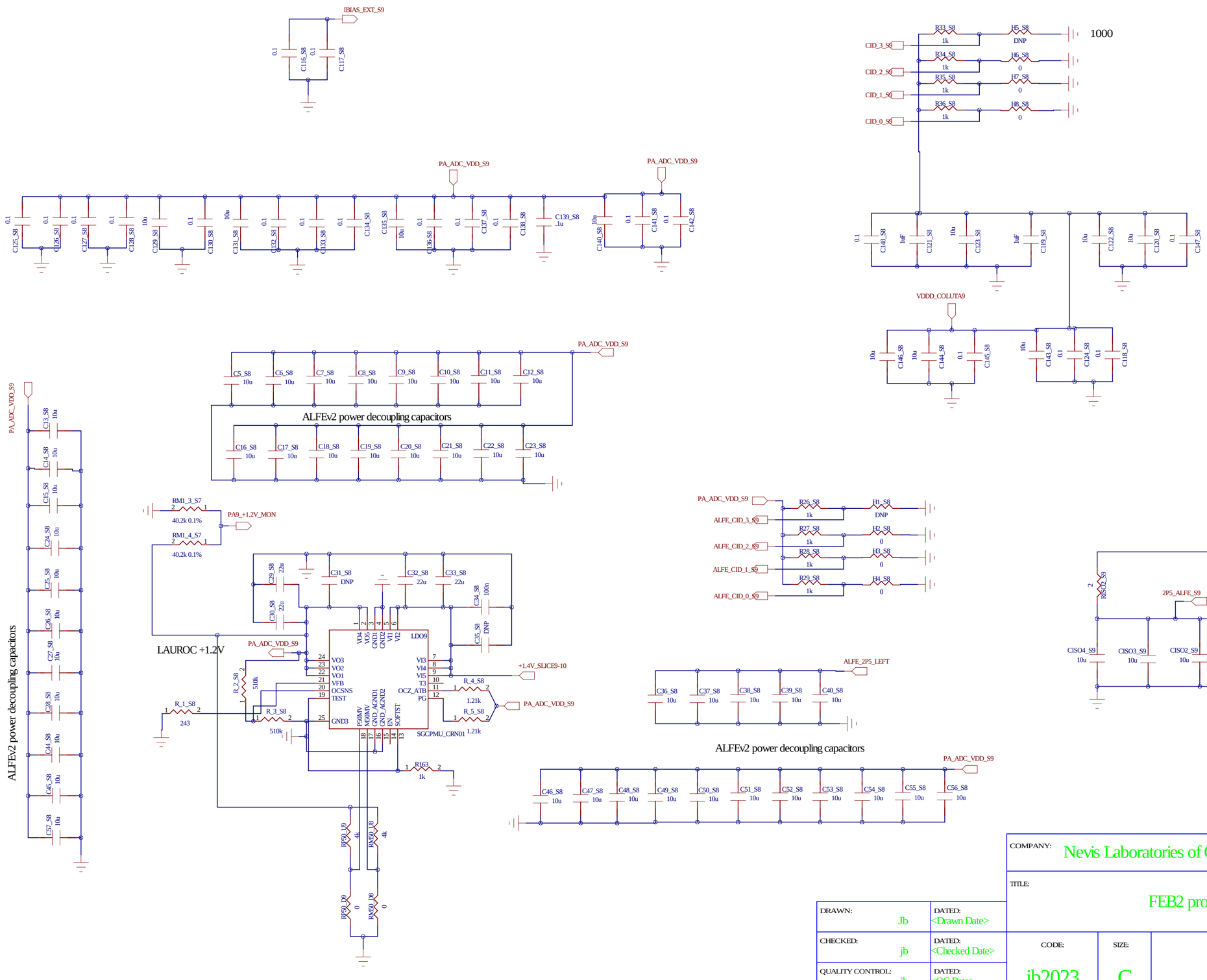

DRAWN: Jb	DATED: <Drawn Date>	COMPANY: Nevis Laboratories of Columbia University	
CHECKED: jb	DATED: <Checked Date>	TITLE: FEB2 prototype v2.0	
QUALITY CONTROL: jb	DATED: <QC Date>	CODE: jb2023	SIZE: C
RELEASED: jb	DATED: <Release Date>	DRAWING NO: 35	REV: v2.0
		SCALE: <Scale>	SHEET: 36 OF 155

REVISION RECORD			
LTR	ECO NO:	APPROVED:	DATE:

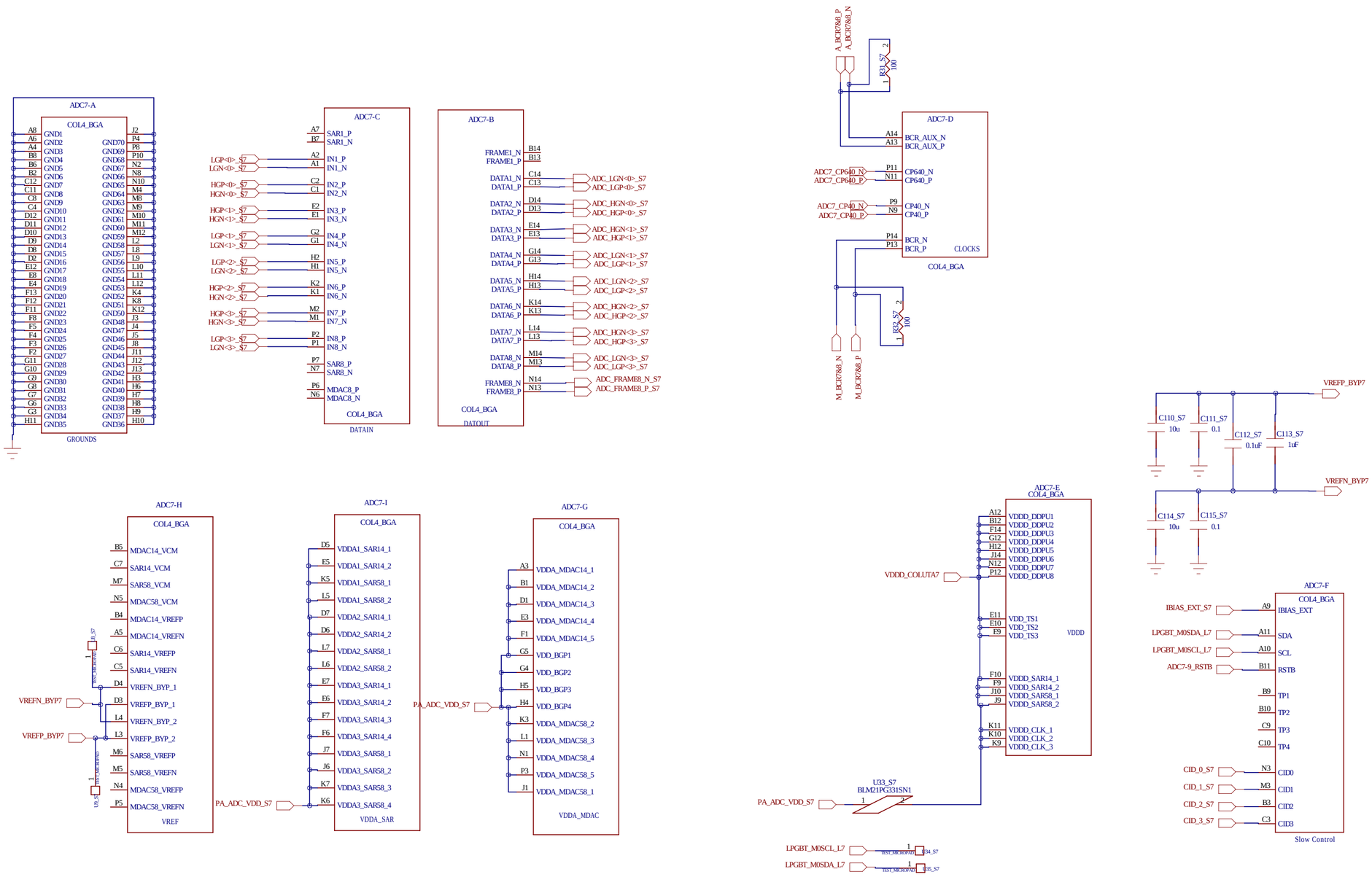

COMPANY: Nevis Laboratories of Columbia University				
TITLE: FEB2 prototype v2.0				
DRAWN: Jb	DATED: <Drawn Date>	CODE: jb2023	SIZE: C	DRAWING NO: 35 / REV: v2.0
CHECKED: jb	DATED: <Checked Date>			
QUALITY CONTROL: jb	DATED: <QC Date>			
RELEASED: jb	DATED: <Release Date>	SCALE: <Scale>		SHEET: 27 OF 155

REVISION RECORD			
LTR	ECO NO:	APPROVED:	DATE:

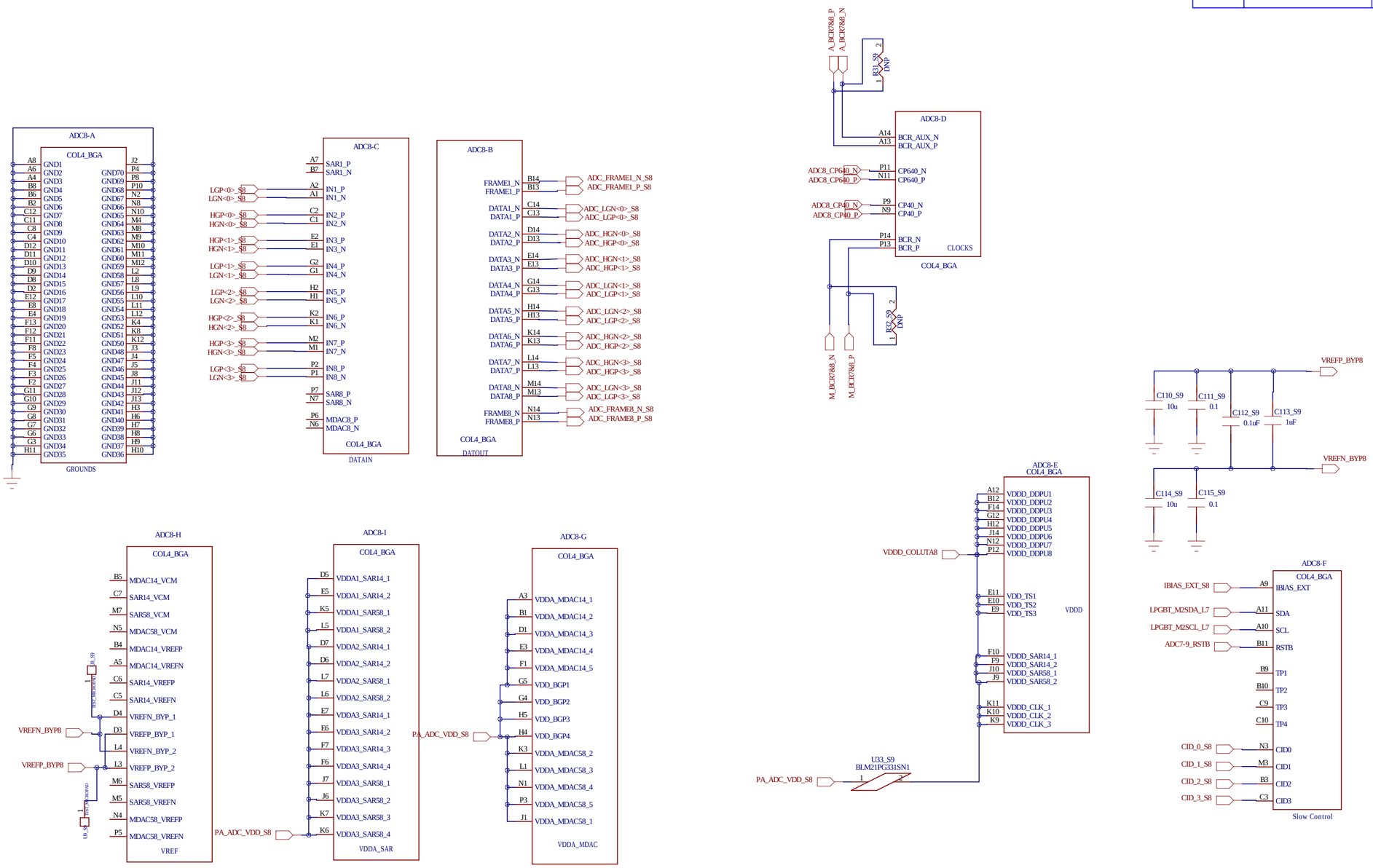

DRAWN: Jb	DATED: <Drawn Date>	COMPANY: Nevis Laboratories of Columbia University	
CHECKED: jb	DATED: <Checked Date>	TITLE: FEB2 prototype v2.0	
QUALITY CONTROL: jb	DATED: <QC Date>	CODE: jb2023	SIZE: C
RELEASED: jb	DATED: <Release Date>	DRAWING NO: 35	REV: v2.0
		SCALE: <Scale>	SHEET: 28 OF 155

REVISION RECORD			
LTR	ECO NO:	APPROVED:	DATE:

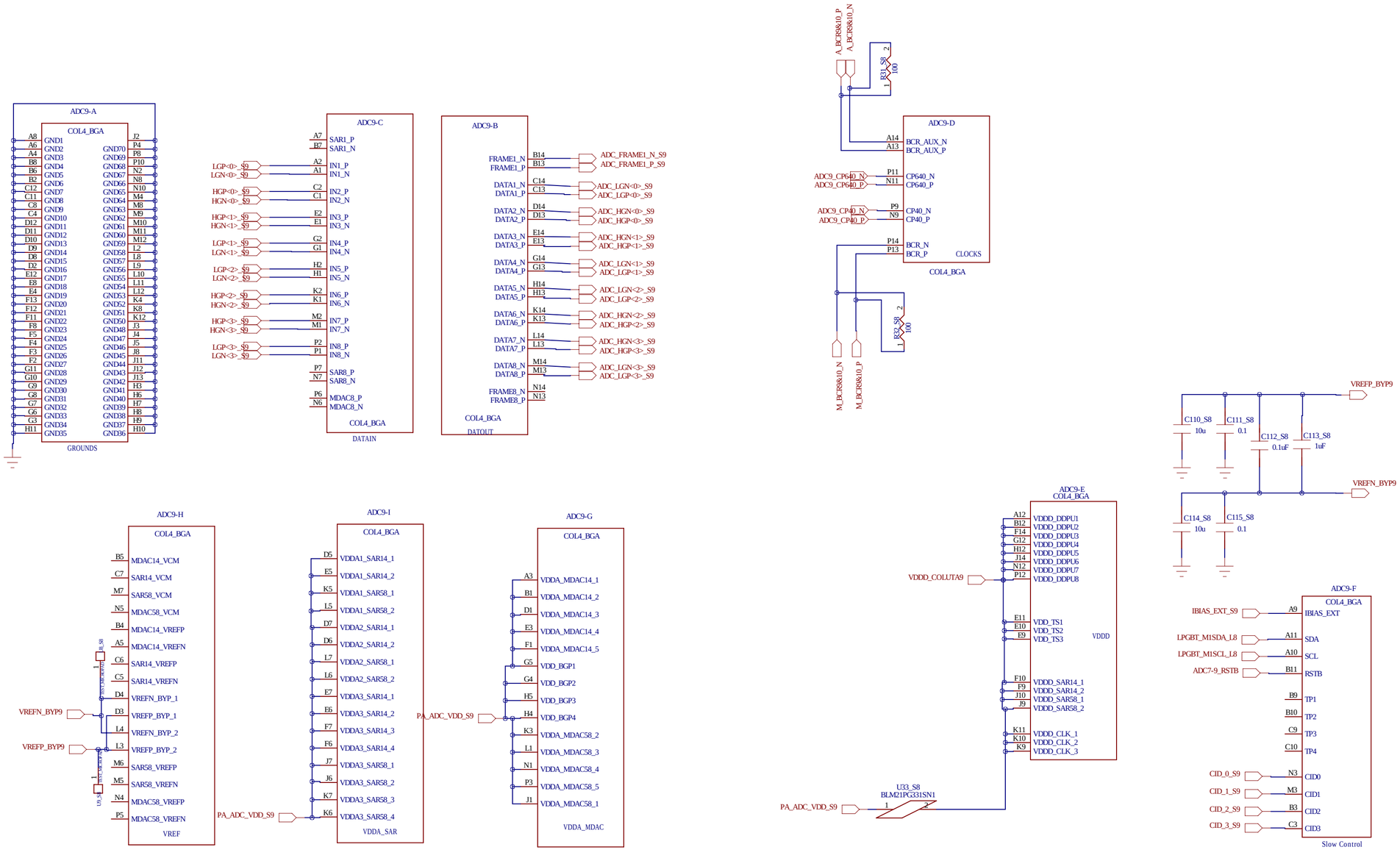

COMPANY: Nevis Laboratories of Columbia University			
TITLE: FEB2 prototype v2.0			
DRAWN: Jb	DATED: <Drawn Date>		
CHECKED: jb	DATED: <Checked Date>		
QUALITY CONTROL: jb	DATED: <QC Date>		
RELEASED: jb	DATED: <Release Date>		
CODE: jb2023	SIZE: C	DRAWING NO: 35	REV: v2.0
SCALE: <Scale>		SHEET: 39 OF 155	

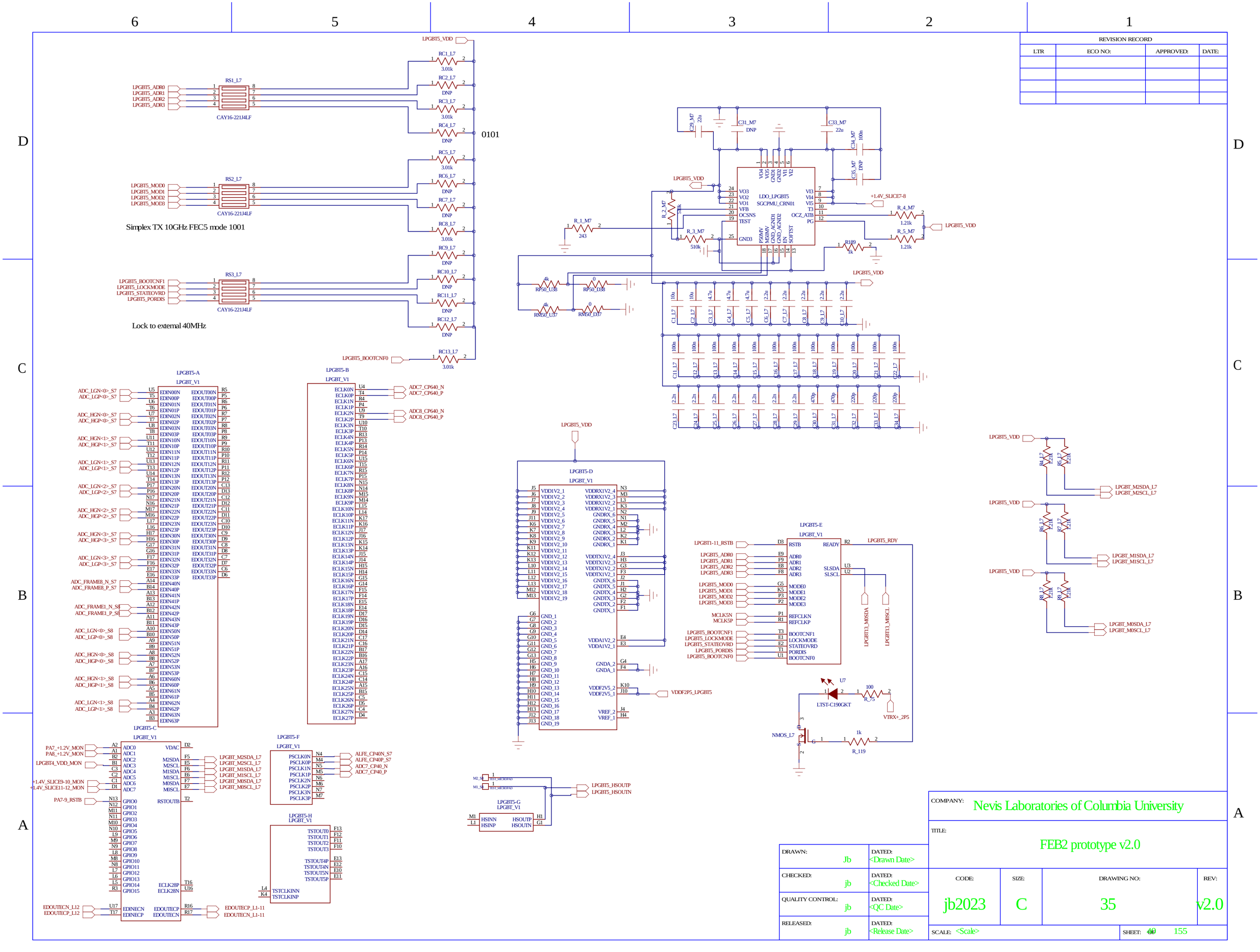

REVISION RECORD			
LTR	ECO NO:	APPROVED:	DATE:

COMPANY: Nevis Laboratories of Columbia University			
TITLE: FEB2 prototype v2.0			
DRAWN: Jb	DATED: <Drawn Date>		
CHECKED: jb	DATED: <Checked Date>		
QUALITY CONTROL: jb	DATED: <QC Date>		
RELEASED: jb	DATED: <Release Date>		
CODE: jb2023	SIZE: C	DRAWING NO: 35	REV: v2.0
SCALE: <Scale>		SHEET: 40 OF 155	

REVISION RECORD			
LTR	ECO NO:	APPROVED:	DATE:

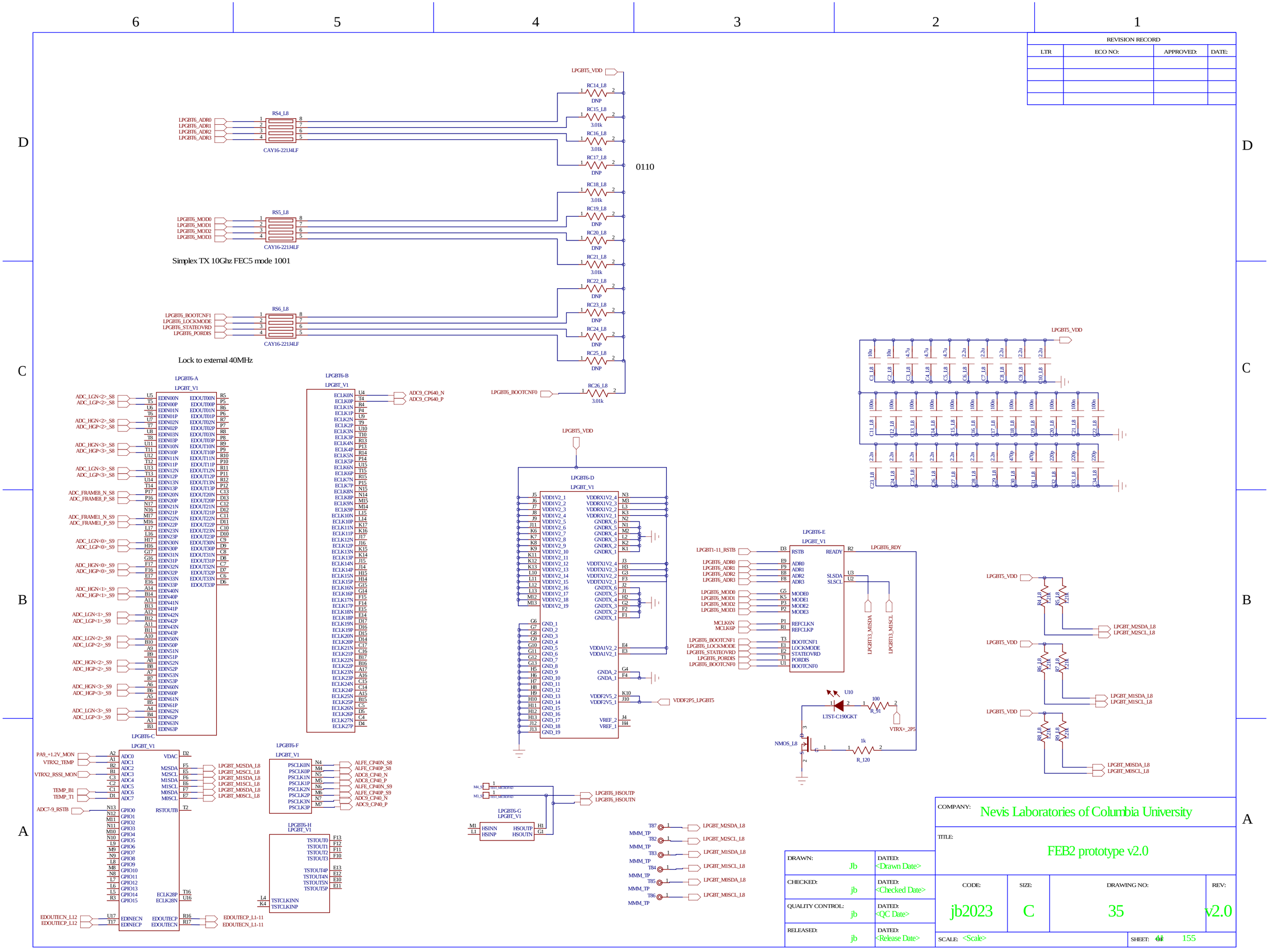

DRAWN: Jb	DATED: <Drawn Date>	COMPANY: Nevis Laboratories of Columbia University	
CHECKED: jb	DATED: <Checked Date>	TITLE: FEB2 prototype v2.0	
QUALITY CONTROL: jb	DATED: <QC Date>	CODE: jb2023	SIZE: C
RELEASED: jb	DATED: <Release Date>	DRAWING NO: 35	REV: v2.0
		SCALE: <Scale>	SHEET: 61 OF 155

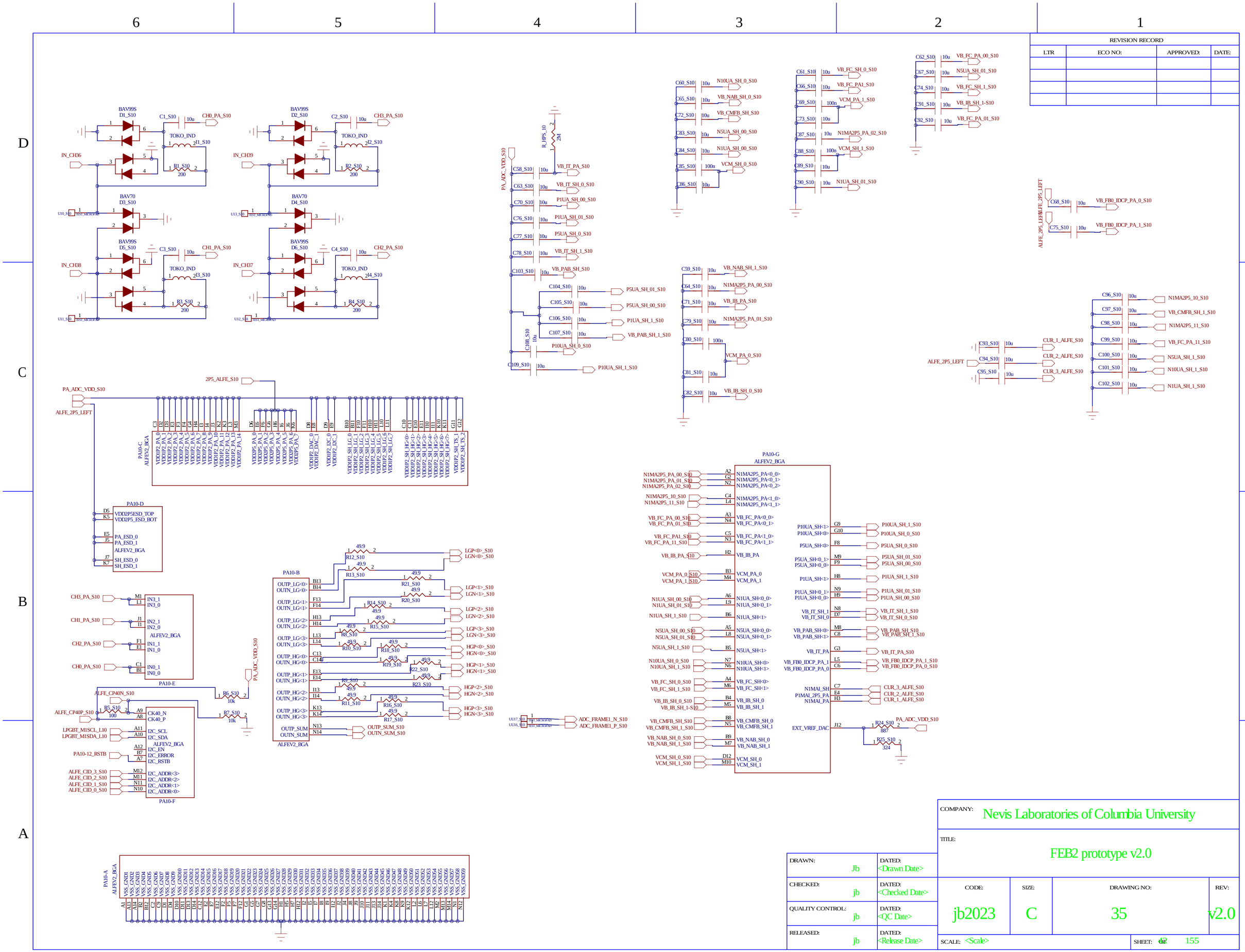
6
5
4
3
2
1
D
C
B
A
BAV99S D1_S10
BAV99S D2_S10
BAV70 D3_S10
BAV70 D4_S10
BAV99S D5_S10
BAV99S D6_S10
TOKO_IND
IN_CH36
IN_CH39
IN_CH38
IN_CH37
CH0_PA_S10
CH3_PA_S10
CH1_PA_S10
CH2_PA_S10
PA_ADC_VDD_S10
ALFE_2P5_LEFT
2P5_ALFE_S10
PA10-C
ALFEV2_BGA
PA10-D
PA10-E
PA10-F
PA10-G
PA10-B
PA10-A
ALFEV2_BGA
ALFE_CP40N_S10
ALFE_CP40P_S10
LPGBT_M1SCL_L10
LPGBT_M1SDA_L10
PA10-12_RSTB
ALFE_CID_3_S10
ALFE_CID_2_S10
ALFE_CID_1_S10
ALFE_CID_0_S10
ADC_FRAME1_N_S10
ADC_FRAME1_P_S10
OUTP_SUM_S10
OUTN_SUM_S10
EXT_VREF_DAC
CUR_1_ALFE_S10
CUR_2_ALFE_S10
CUR_3_ALFE_S10
ALFE_2P5_LEFT
VB_FB0_IDCP_PA_0_S10
VB_FB0_IDCP_PA_1_S10
REVISION RECORD
LTR
ECO NO:
APPROVED:
DATE:
COMPANY:
Nevis Laboratories of Columbia University
TITLE:
FEB2 prototype v2.0
DRAWN:
Jb
DATED:
<Drawn Date>
CHECKED:
jb
DATED:
<Checked Date>
QUALITY CONTROL:
jb
DATED:
<QC Date>
RELEASED:
jb
DATED:
<Release Date>
CODE:
jb2023
SIZE:
C
DRAWING NO:
35
REV:
v2.0
SCALE:
<Scale>
SHEET:
42
155

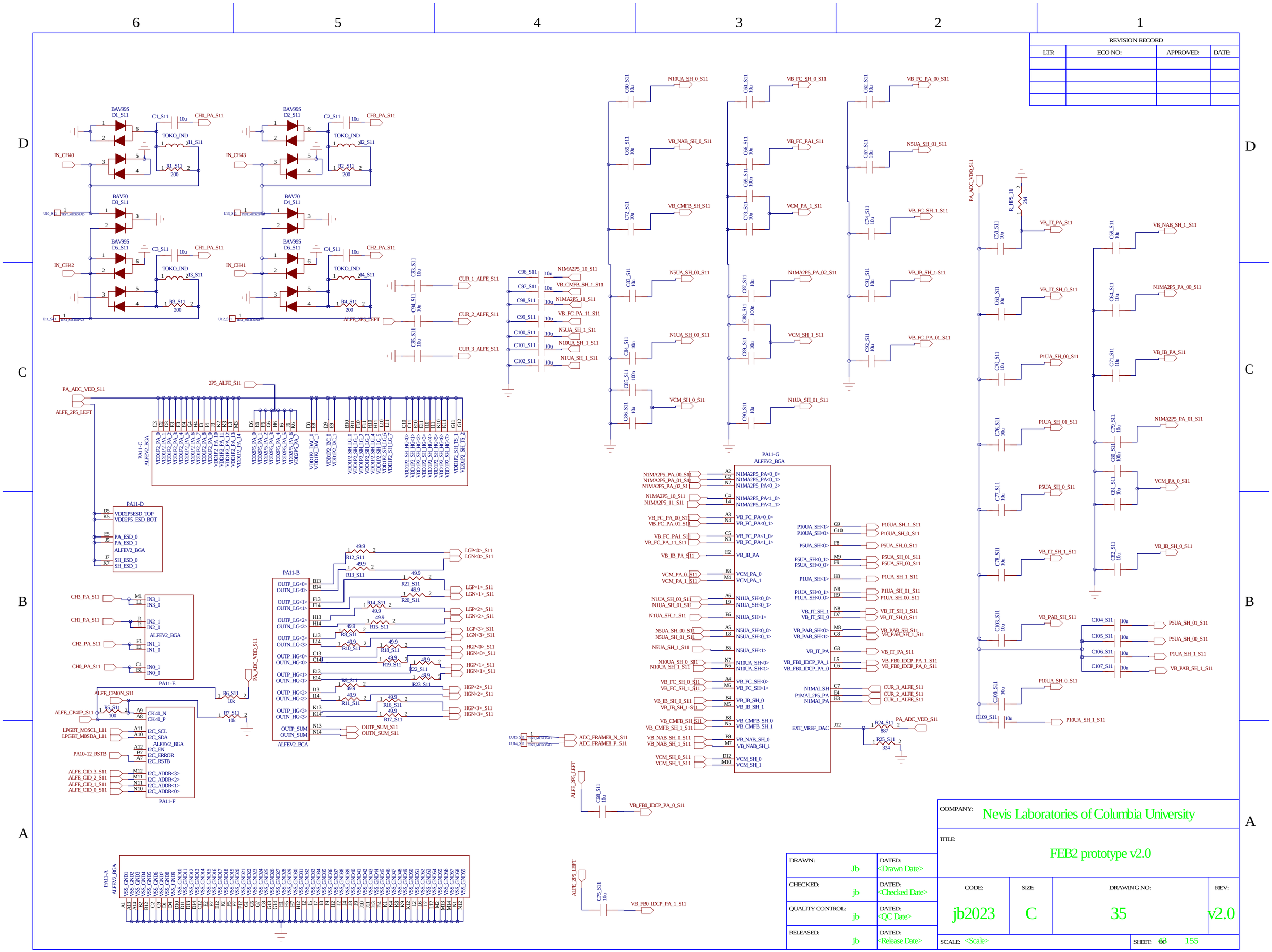

REVISION RECORD			
LTR	ECO NO:	APPROVED:	DATE:

DRAWN: Jb	DATED: <Drawn Date>		
CHECKED: jb	DATED: <Checked Date>		
QUALITY CONTROL: jb	DATED: <QC Date>		
RELEASED: jb	DATED: <Release Date>		

COMPANY: Nevis Laboratories of Columbia University

TITLE: FEB2 prototype v2.0

CODE:	SIZE:	DRAWING NO:	REV:
jb2023	C	35	v2.0

SCALE: <Scale> SHEET: 43 OF 155

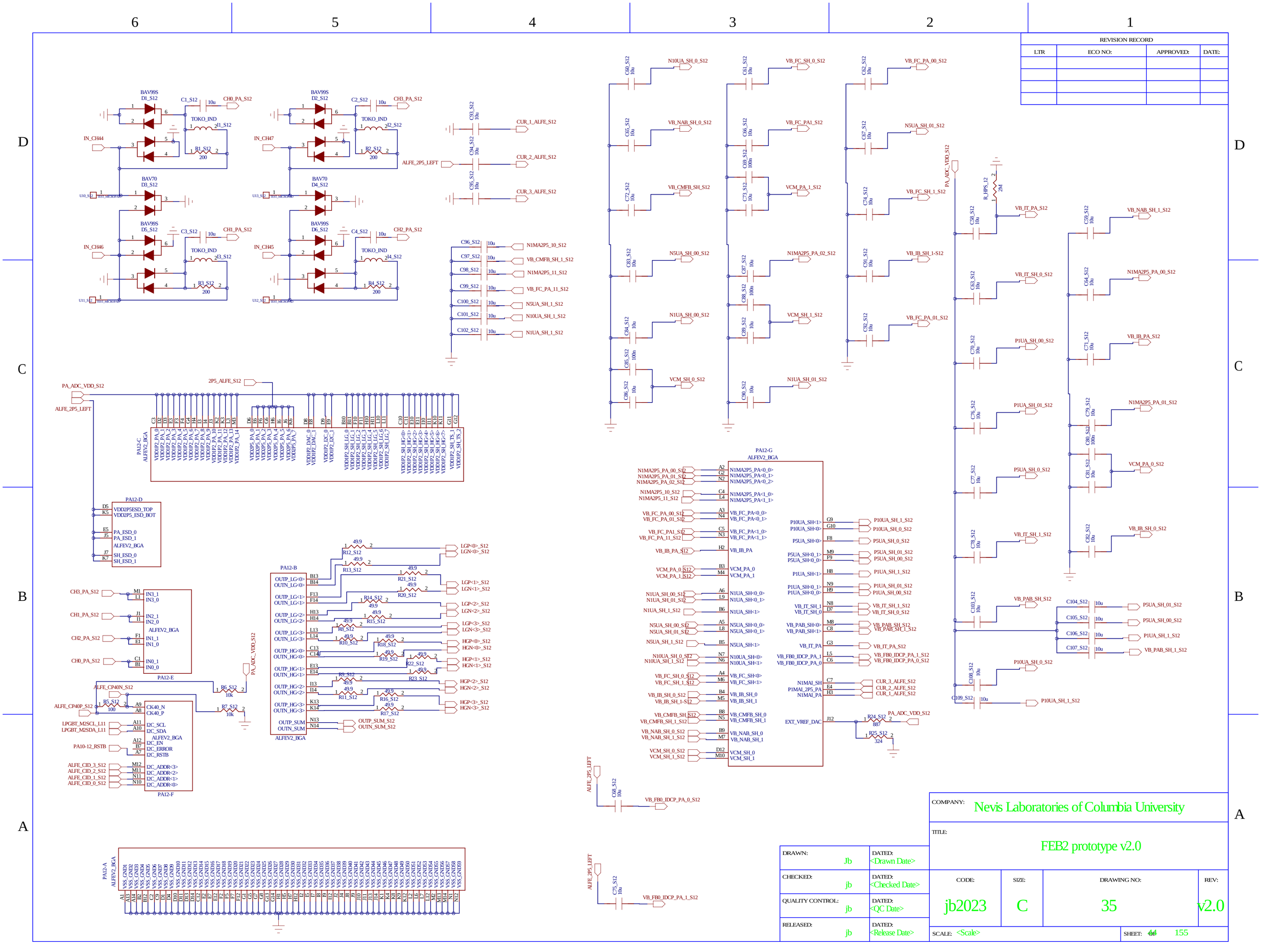
REVISION RECORD
LTR
ECO NO:
APPROVED:
DATE:
BAV99S D1_S12
BAV99S D2_S12
BAV70 D3_S12
BAV70 D4_S12
BAV99S D5_S12
BAV99S D6_S12
TOKO_IND
PA12-C ALFEV2_BGA
PA12-D
PA12-E
PA12-F
PA12-G ALFEV2_BGA
PA12-B
PA12-A ALFEV2_BGA
COMPANY:
Nevis Laboratories of Columbia University
TITLE:
FEB2 prototype v2.0
DRAWN: Jb
DATED: <Drawn Date>
CHECKED: jb
DATED: <Checked Date>
QUALITY CONTROL: jb
DATED: <QC Date>
RELEASED: jb
DATED: <Release Date>
CODE: jb2023
SIZE: C
DRAWING NO: 35
REV: v2.0
SCALE: <Scale>
SHEET: 64 155

REVISION RECORD			
LTR	ECO NO:	APPROVED:	DATE:

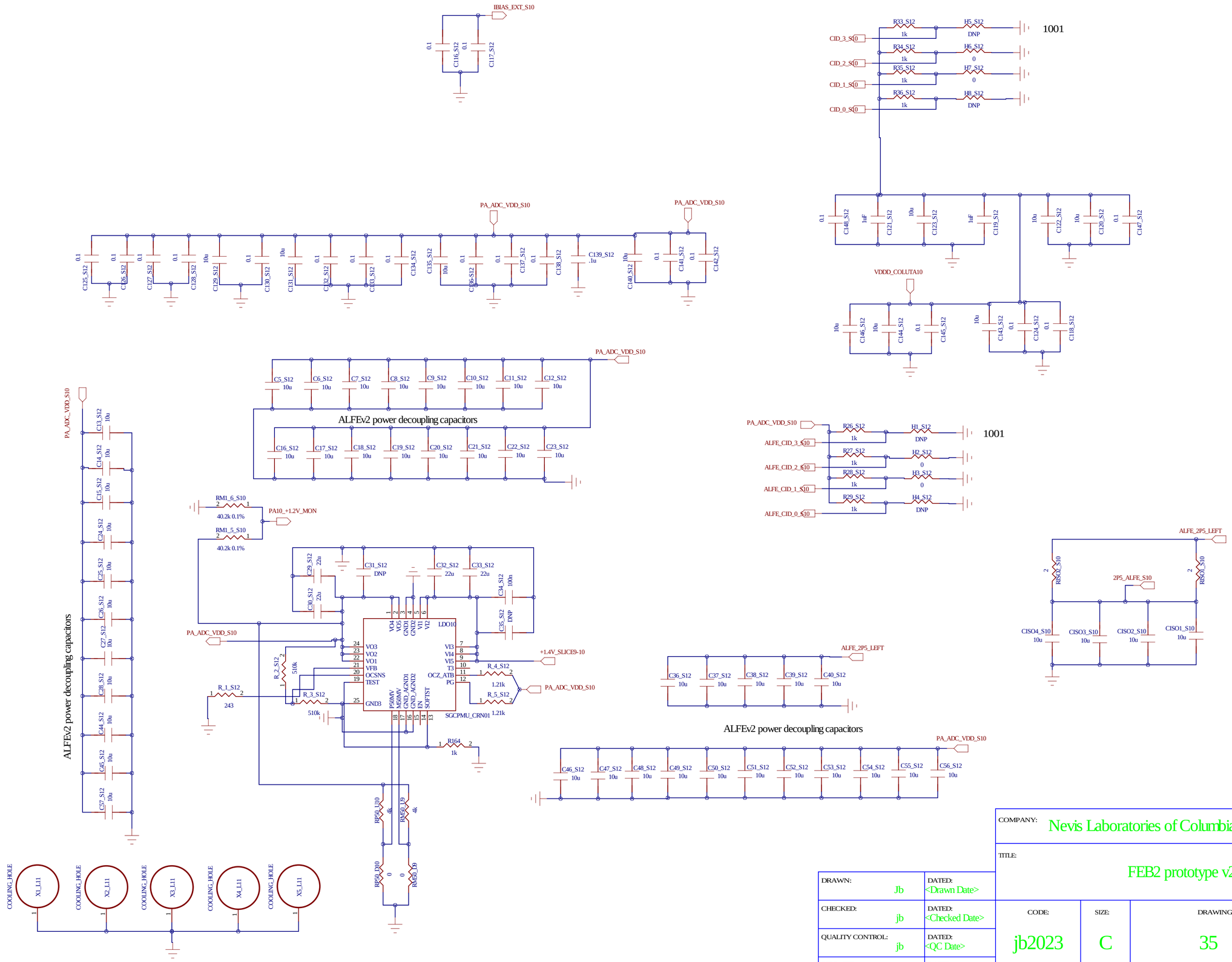

DRAWN: Jb	DATED: <Drawn Date>	COMPANY: Nevis Laboratories of Columbia University	
CHECKED: jb	DATED: <Checked Date>	TITLE: FEB2 prototype v2.0	
QUALITY CONTROL: jb	DATED: <QC Date>	CODE: jb2023	SIZE: C
RELEASED: jb	DATED: <Release Date>	DRAWING NO: 35	REV: v2.0
		SCALE: <Scale>	SHEET: 45 OF 155

REVISION RECORD			
LTR	ECO NO:	APPROVED:	DATE:

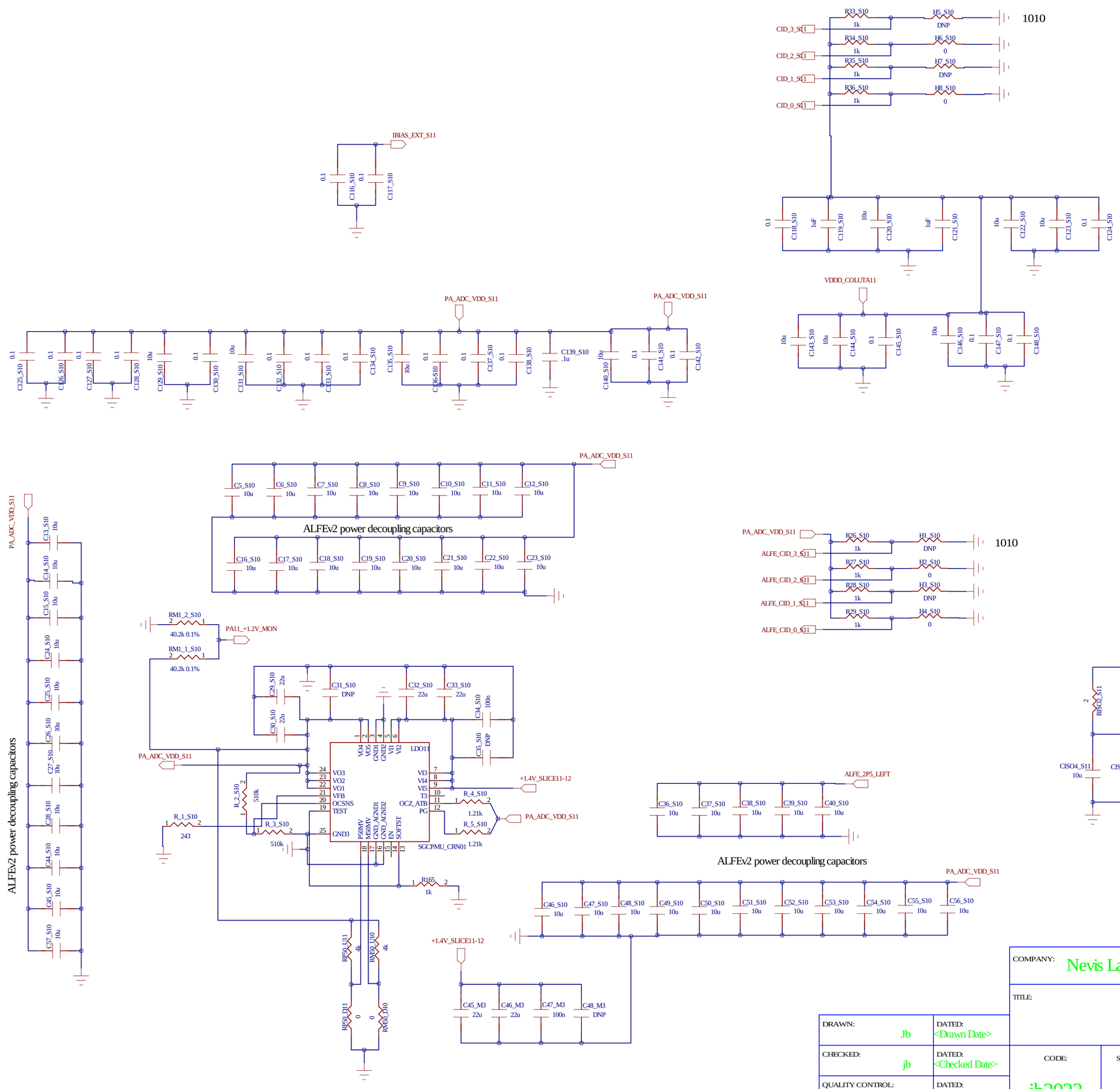

DRAWN: Jb	DATED: <Drawn Date>	COMPANY: Nevis Laboratories of Columbia University	
CHECKED: jb	DATED: <Checked Date>	TITLE: FEB2 prototype v2.0	
QUALITY CONTROL: jb	DATED: <QC Date>	CODE: jb2023	SIZE: C
RELEASED: jb	DATED: <Release Date>	DRAWING NO: 35	REV: v2.0
		SCALE: <Scale>	SHEET: 46 155

REVISION RECORD			
LTR	ECO NO:	APPROVED:	DATE:

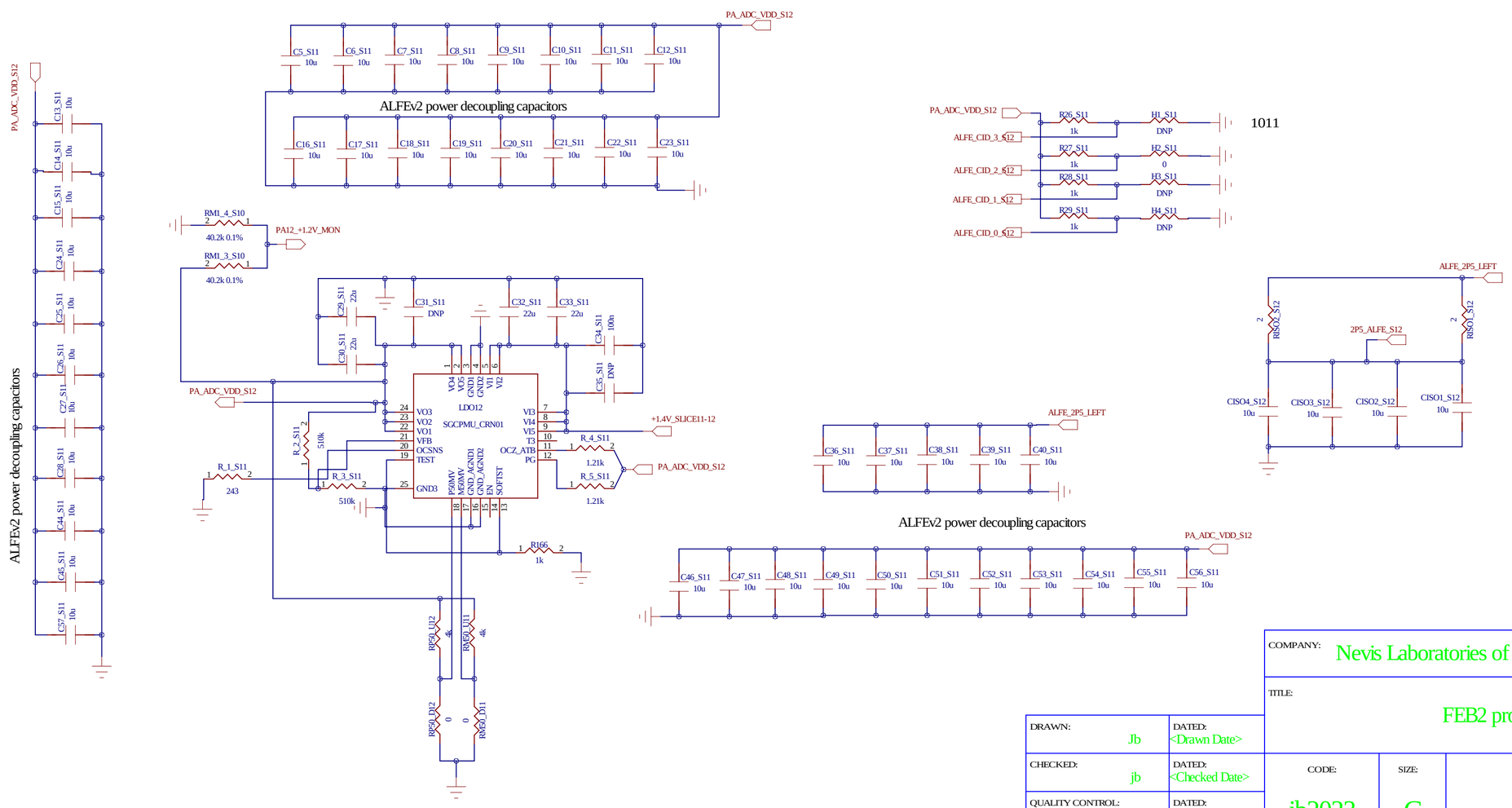

DRAWN: Jb	DATED: <Drawn Date>	COMPANY: Nevis Laboratories of Columbia University		
CHECKED: jb	DATED: <Checked Date>	TITLE: FEB2 prototype v2.0		
QUALITY CONTROL: jb	DATED: <QC Date>	CODE: jb2023	SIZE: C	DRAWING NO: 35 / REV: v2.0
RELEASED: jb	DATED: <Release Date>	SCALE: <Scale>	SHEET: 47 OF 155	

REVISION RECORD			
LTR	ECO NO:	APPROVED:	DATE:

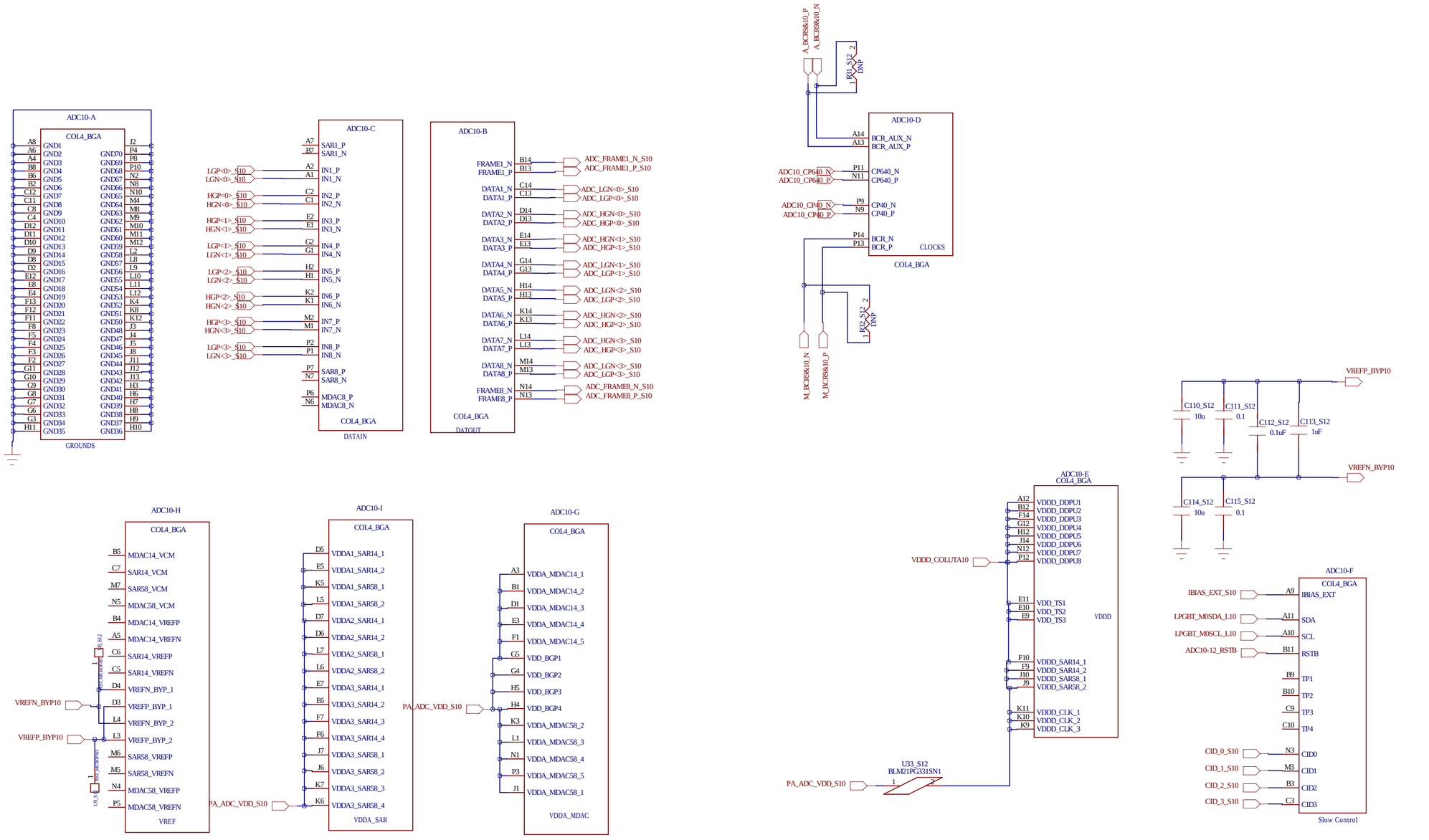

COMPANY: Nevis Laboratories of Columbia University				
TITLE: FEB2 prototype v2.0				
DRAWN: Jb	DATED: <Drawn Date>	CODE: jb2023	SIZE: C	DRAWING NO: 35 / REV: v2.0
CHECKED: jb	DATED: <Checked Date>			
QUALITY CONTROL: jb	DATED: <QC Date>			
RELEASED: jb	DATED: <Release Date>	SCALE: <Scale>		SHEET: 48 155

REVISION RECORD			
LTR	ECO NO:	APPROVED:	DATE:

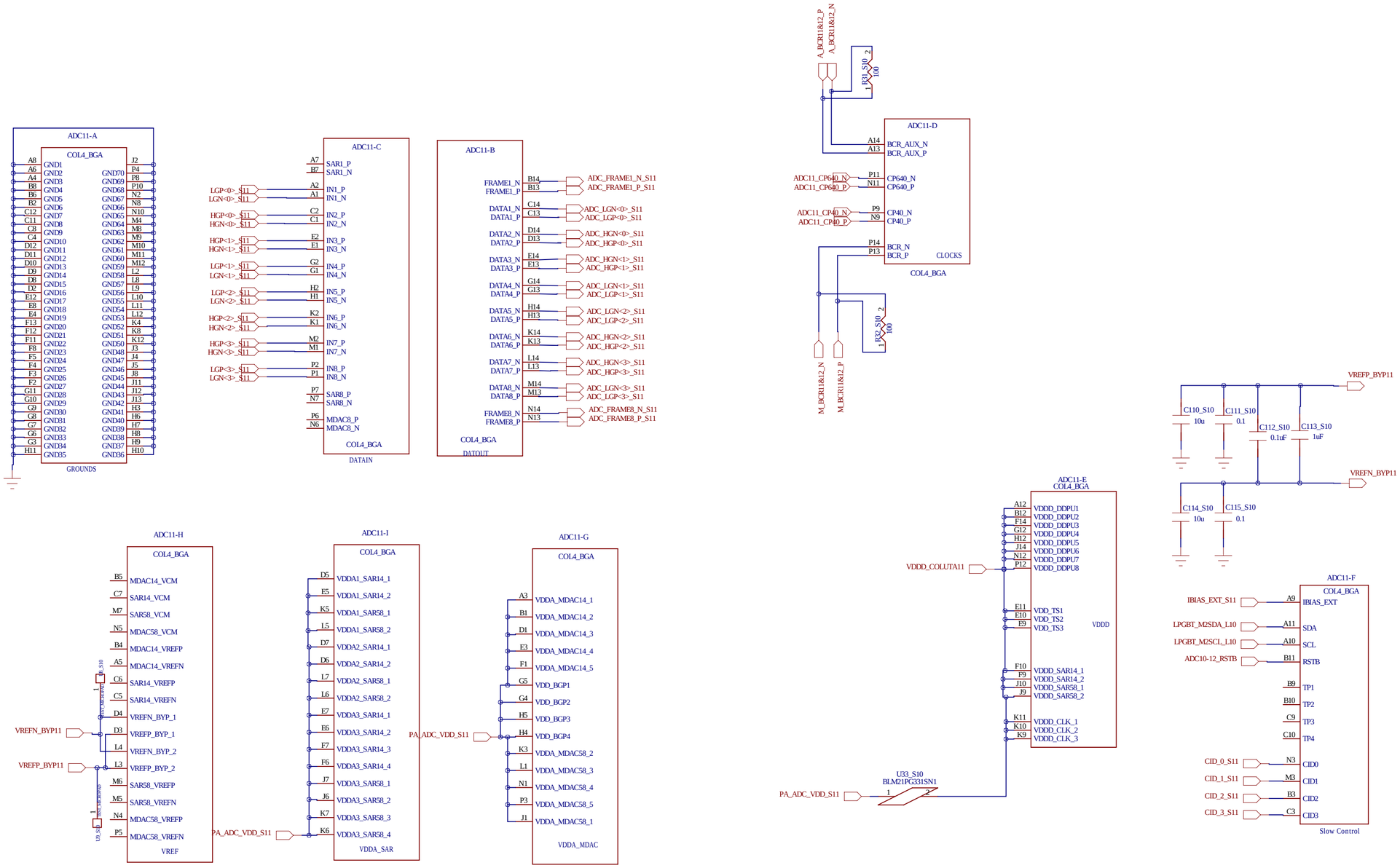

COMPANY: Nevis Laboratories of Columbia University			
TITLE: FEB2 prototype v2.0			
DRAWN: Jb	DATED: <Drawn Date>		
CHECKED: jb	DATED: <Checked Date>		
QUALITY CONTROL: jb	DATED: <QC Date>		
RELEASED: jb	DATED: <Release Date>		
CODE: jb2023	SIZE: C	DRAWING NO: 35	REV: v2.0
SCALE: <Scale>		SHEET: 40 OF 155	

REVISION RECORD			
LTR	ECO NO:	APPROVED:	DATE:

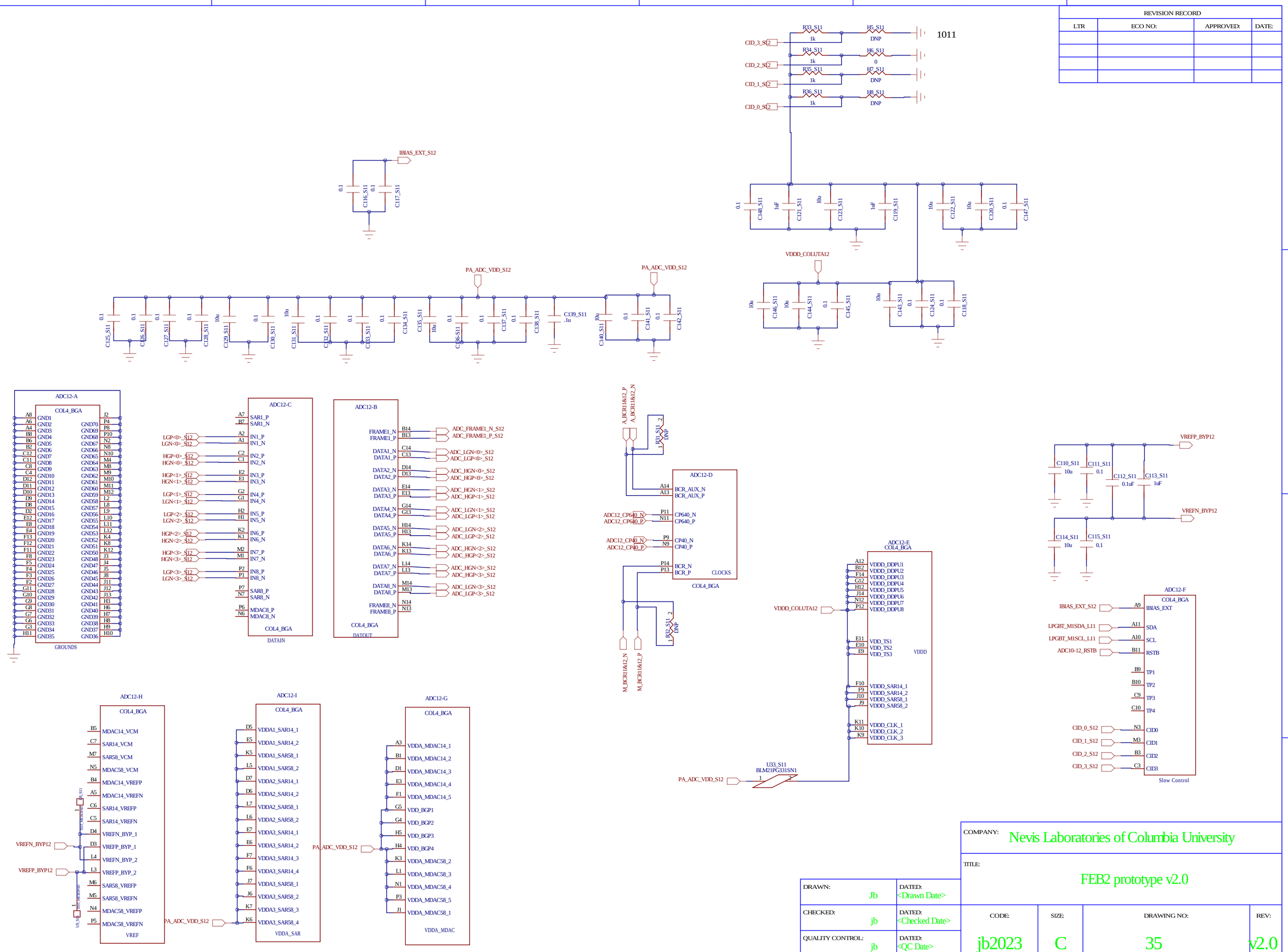

DRAWN: Jb	DATED: <Drawn Date>	COMPANY: Nevis Laboratories of Columbia University	
CHECKED: jb	DATED: <Checked Date>	TITLE: FEB2 prototype v2.0	
QUALITY CONTROL: jb	DATED: <QC Date>	CODE: jb2023 / SIZE: C / DRAWING NO: 35	REV: v2.0
RELEASED: jb	DATED: <Release Date>	SCALE: <Scale>	SHEET: 50 OF 155

REVISION RECORD			
LTR	ECO NO:	APPROVED:	DATE:

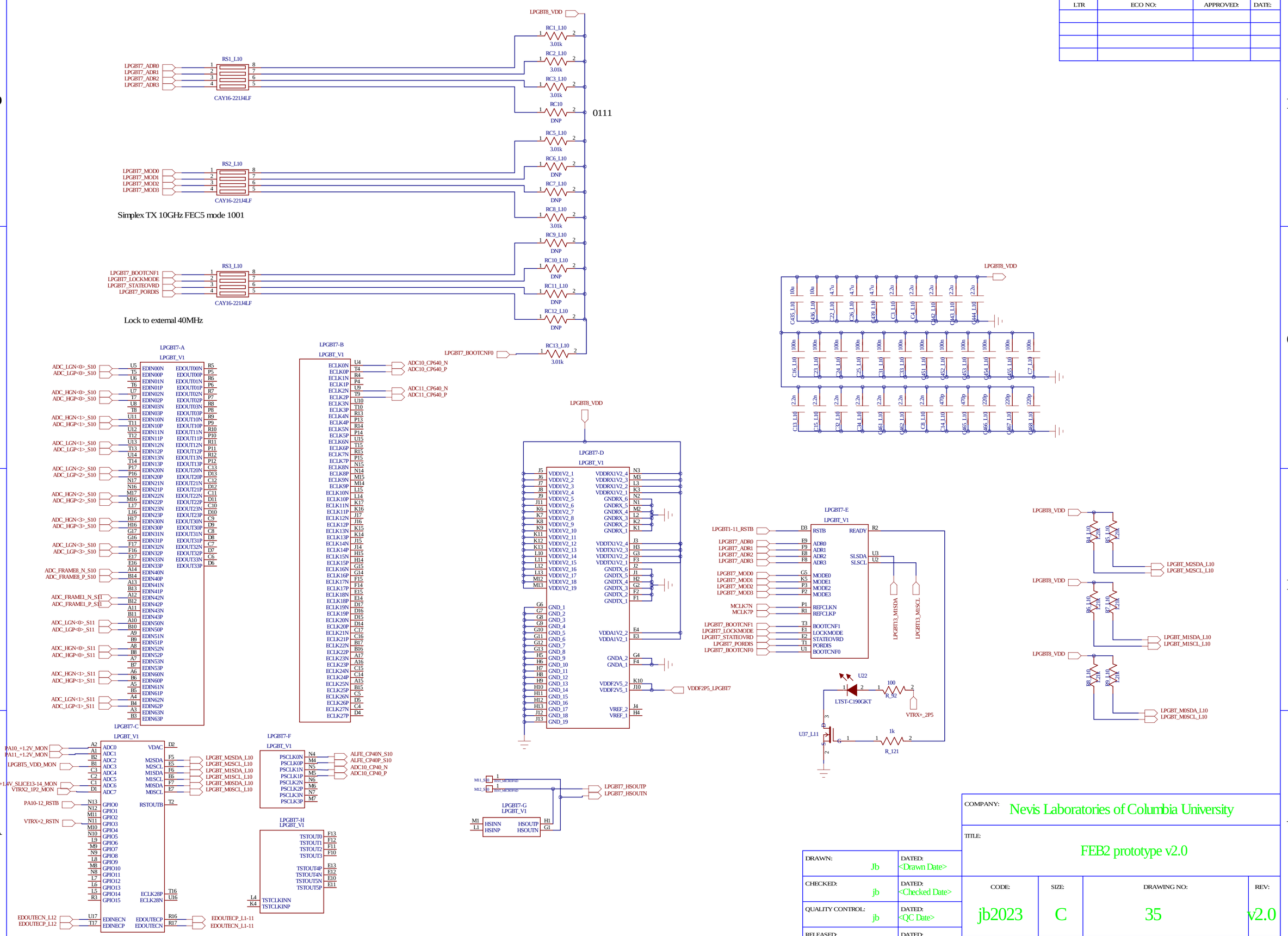

COMPANY:	Nevis Laboratories of Columbia University		
TITLE:	FEB2 prototype v2.0		
DRAWN: Jb	DATED: <Drawn Date>		
CHECKED: jb	DATED: <Checked Date>		
QUALITY CONTROL: jb	DATED: <QC Date>		
RELEASED: jb	DATED: <Release Date>		
CODE: jb2023	SIZE: C	DRAWING NO: 35	REV: v2.0
SCALE: <Scale>		SHEET: 54 OF 155	

REVISION RECORD			
LTR	ECO NO:	APPROVED:	DATE:

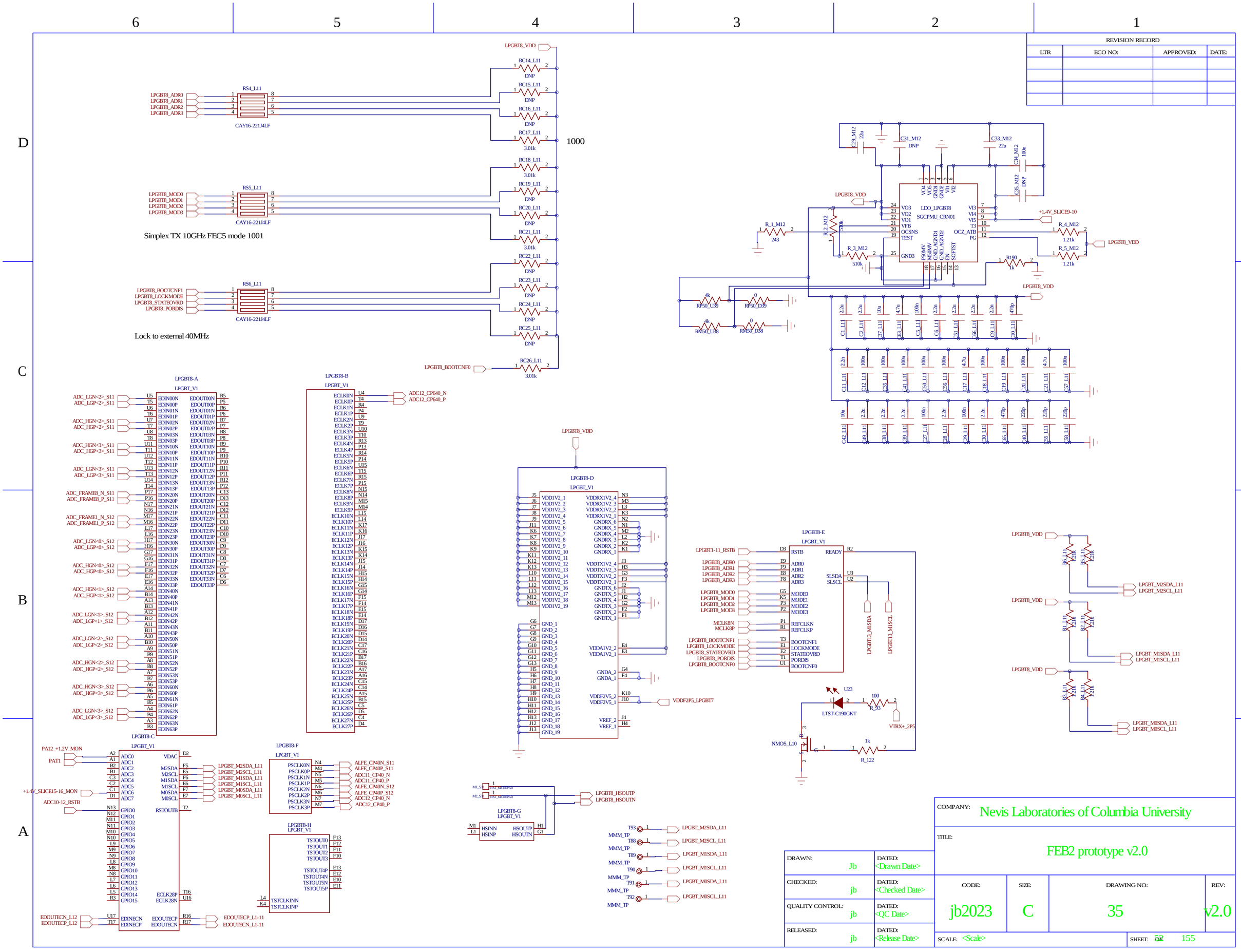

DRAWN: Jb	DATED: <Drawn Date>	COMPANY: Nevis Laboratories of Columbia University	
CHECKED: jb	DATED: <Checked Date>	TITLE: FEB2 prototype v2.0	
QUALITY CONTROL: jb	DATED: <QC Date>	CODE: jb2023	SIZE: C
RELEASED: jb	DATED: <Release Date>	DRAWING NO: 35	REV: v2.0
		SCALE: <Scale>	SHEET: 62 OF 155

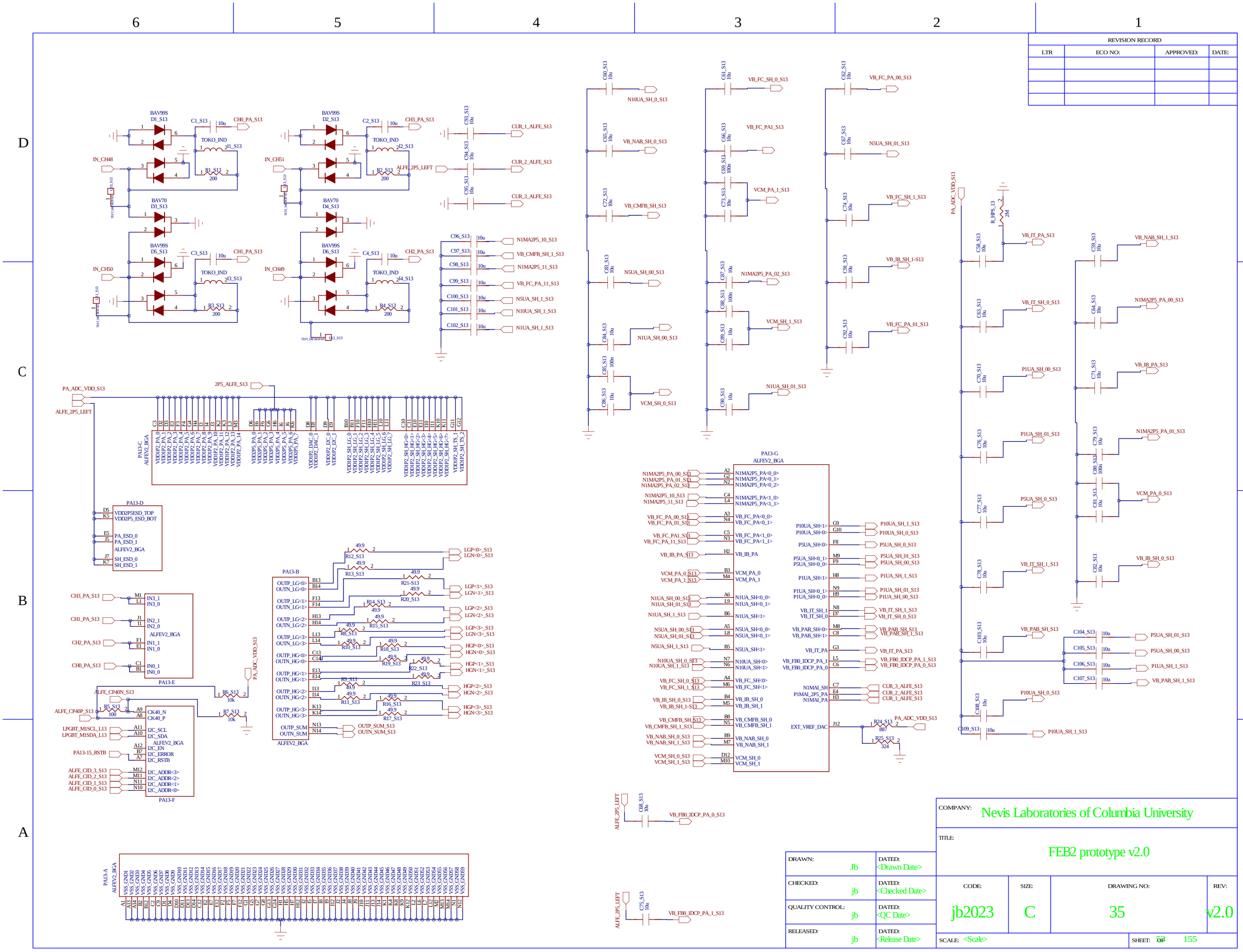

REVISION RECORD			
LTR	ECO NO:	APPROVED:	DATE:

COMPANY:	Nevis Laboratories of Columbia University		
TITLE:	FEB2 prototype v2.0		
DRAWN: Jb	DATED: <Drawn Date>		
CHECKED: jb	DATED: <Checked Date>		
QUALITY CONTROL: jb	DATED: <QC Date>		
RELEASED: jb	DATED: <Release Date>		
CODE: jb2023	SIZE: C	DRAWING NO: 35	REV: v2.0
SCALE: <Scale>		SHEET: 155	

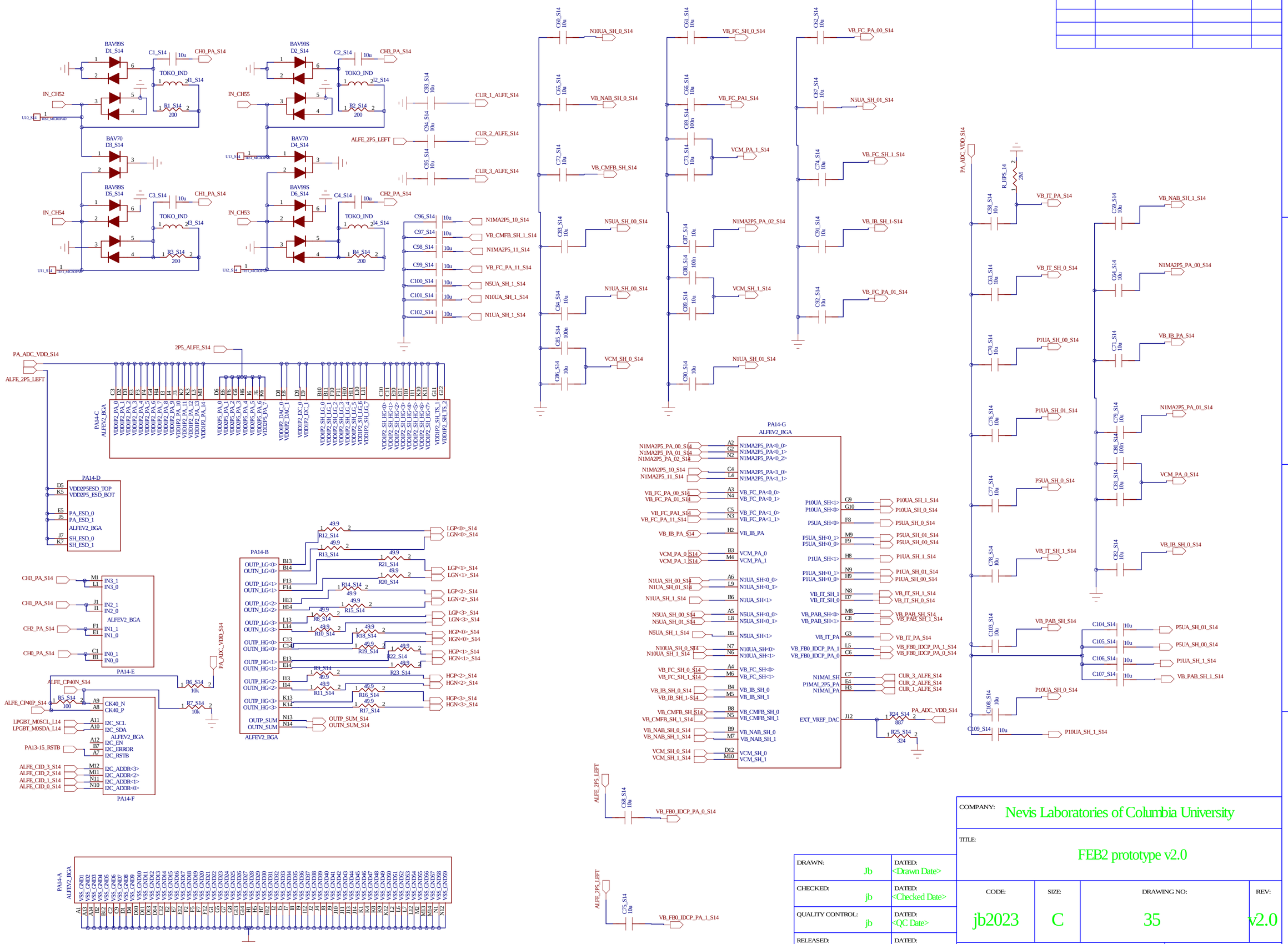

REVISION RECORD			
LTR	ECO NO:	APPROVED:	DATE:

DRAWN: Jb	DATED: <Drawn Date>	COMPANY: Nevis Laboratories of Columbia University	
CHECKED: jb	DATED: <Checked Date>	TITLE: FEB2 prototype v2.0	
QUALITY CONTROL: jb	DATED: <QC Date>	CODE: jb2023 / SIZE: C / DRAWING NO: 35	REV: v2.0
RELEASED: jb	DATED: <Release Date>	SCALE: <Scale>	SHEET: 54 of 155

REVISION RECORD			
LTR	ECO NO:	APPROVED:	DATE:

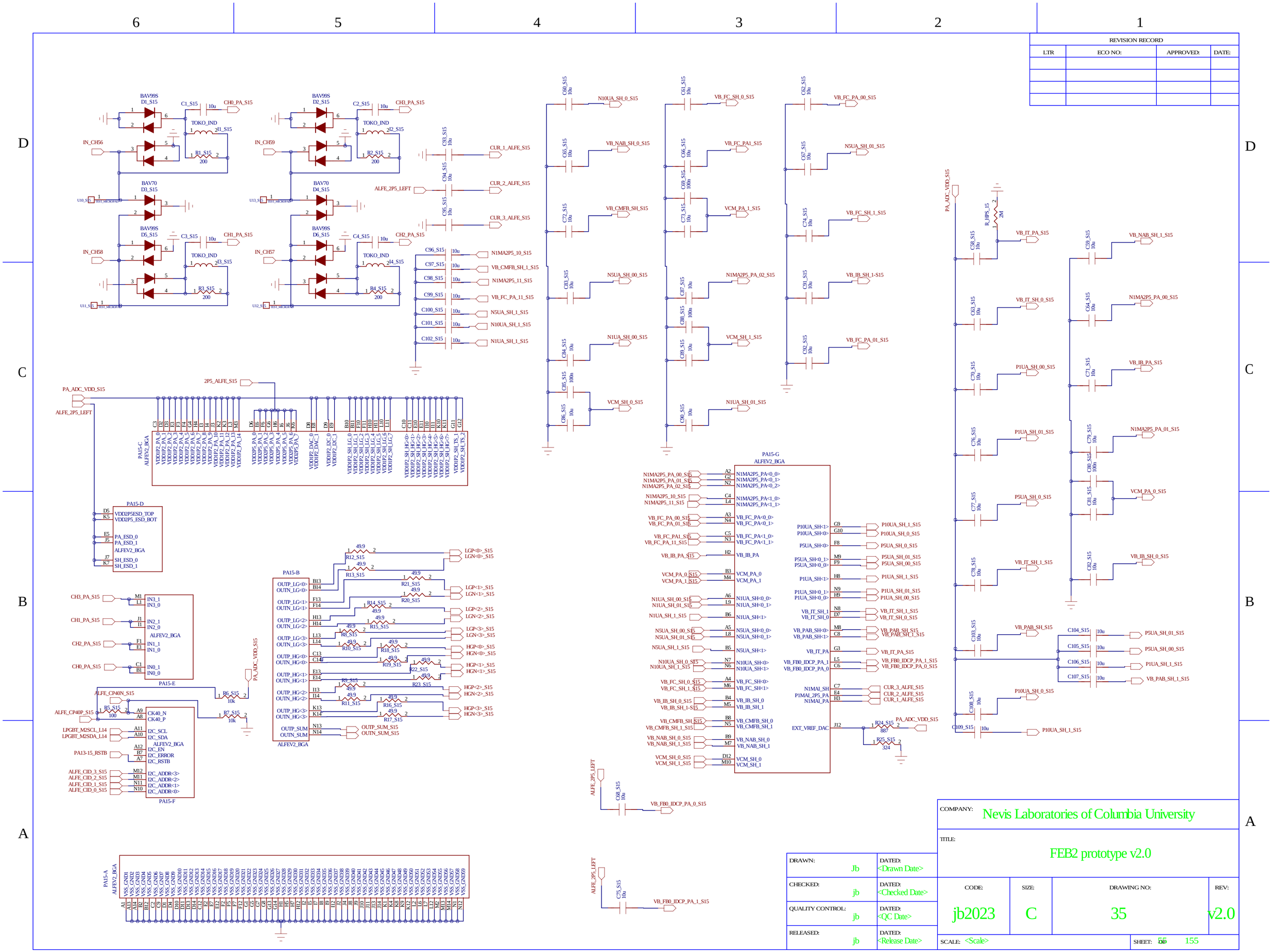

DRAWN: Jb	DATED: <Drawn Date>	COMPANY: Nevis Laboratories of Columbia University	
CHECKED: jb	DATED: <Checked Date>	TITLE: FEB2 prototype v2.0	
QUALITY CONTROL: jb	DATED: <QC Date>	CODE: jb2023	SIZE: C
RELEASED: jb	DATED: <Release Date>	DRAWING NO: 35	REV: v2.0
		SCALE: <Scale>	SHEET: 55 OF 155

REVISION RECORD			
LTR	ECO NO:	APPROVED:	DATE:

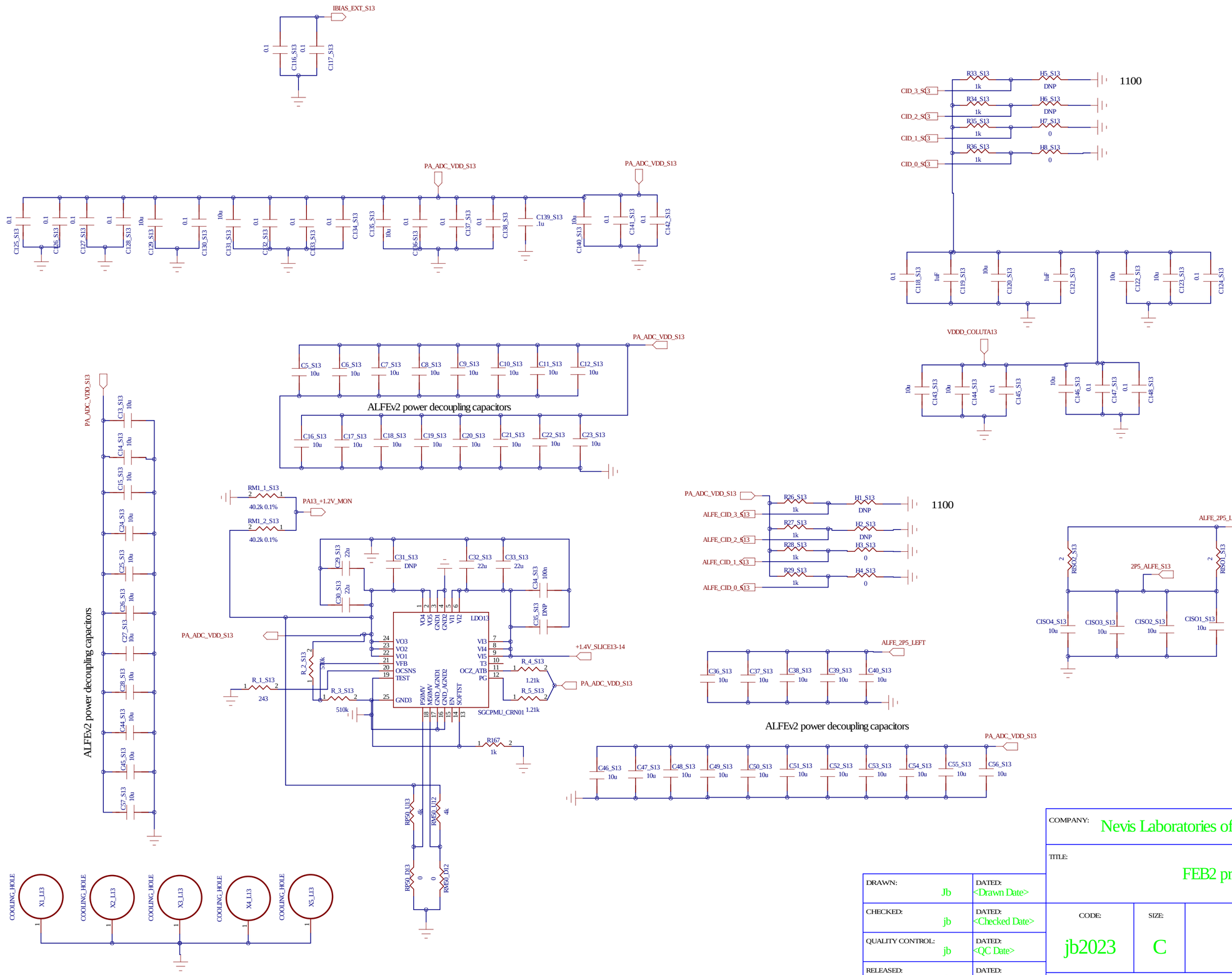

DRAWN: Jb	DATED: <Drawn Date>	COMPANY: Nevis Laboratories of Columbia University	
CHECKED: jb	DATED: <Checked Date>	TITLE: FEB2 prototype v2.0	
QUALITY CONTROL: jb	DATED: <QC Date>	CODE: jb2023	SIZE: C
RELEASED: jb	DATED: <Release Date>	DRAWING NO: 35	REV: v2.0
		SCALE: <Scale>	SHEET: 56 OF 155

REVISION RECORD			
LTR	ECO NO:	APPROVED:	DATE:

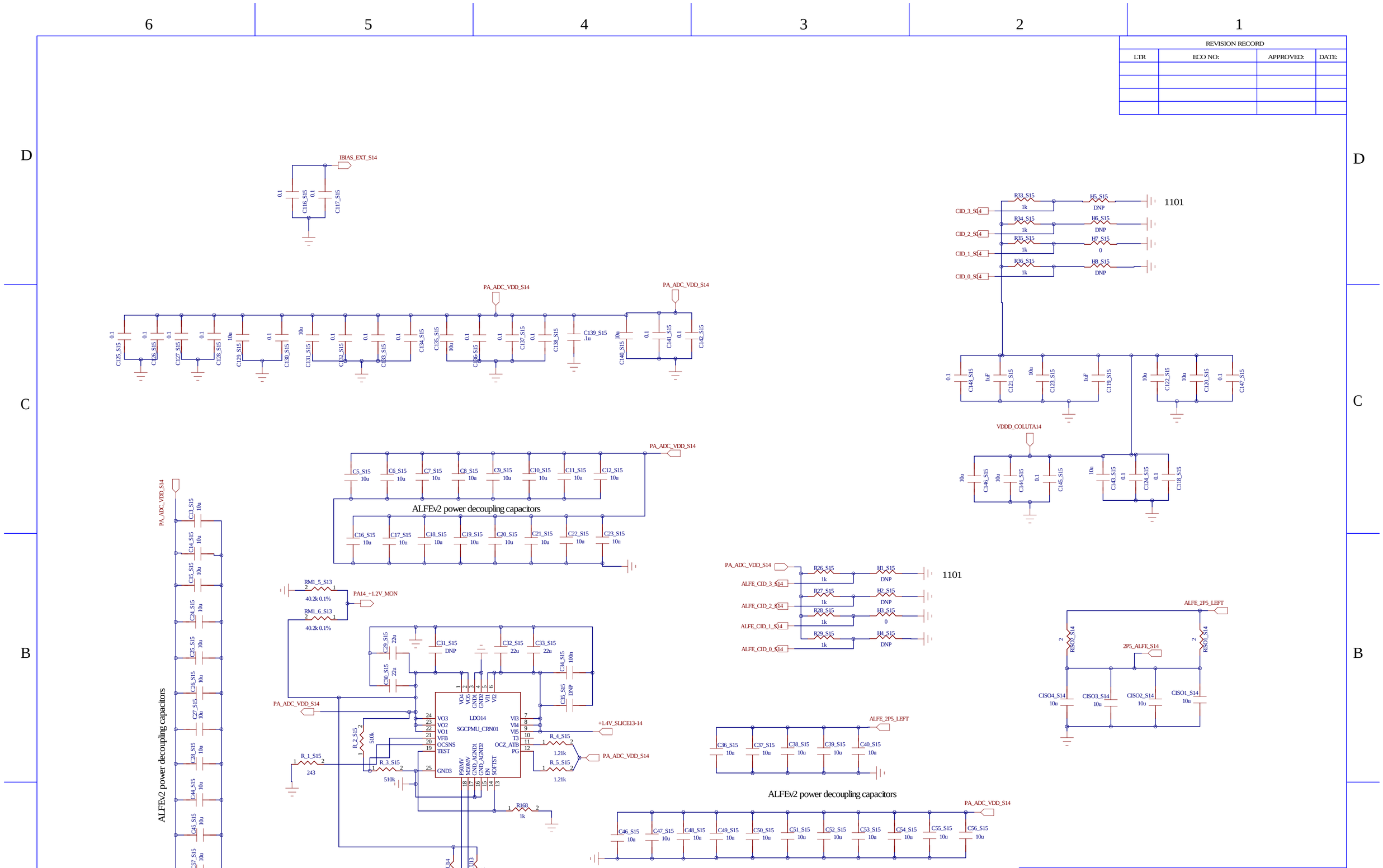

DRAWN: Jb	DATED: <Drawn Date>	COMPANY: Nevis Laboratories of Columbia University	
CHECKED: jb	DATED: <Checked Date>	TITLE: FEB2 prototype v2.0	
QUALITY CONTROL: jb	DATED: <QC Date>	CODE: jb2023	SIZE: C
RELEASED: jb	DATED: <Release Date>	DRAWING NO: 35	REV: v2.0
		SCALE: <Scale>	SHEET: 67 OF 155

REVISION RECORD			
LTR	ECO NO:	APPROVED:	DATE:

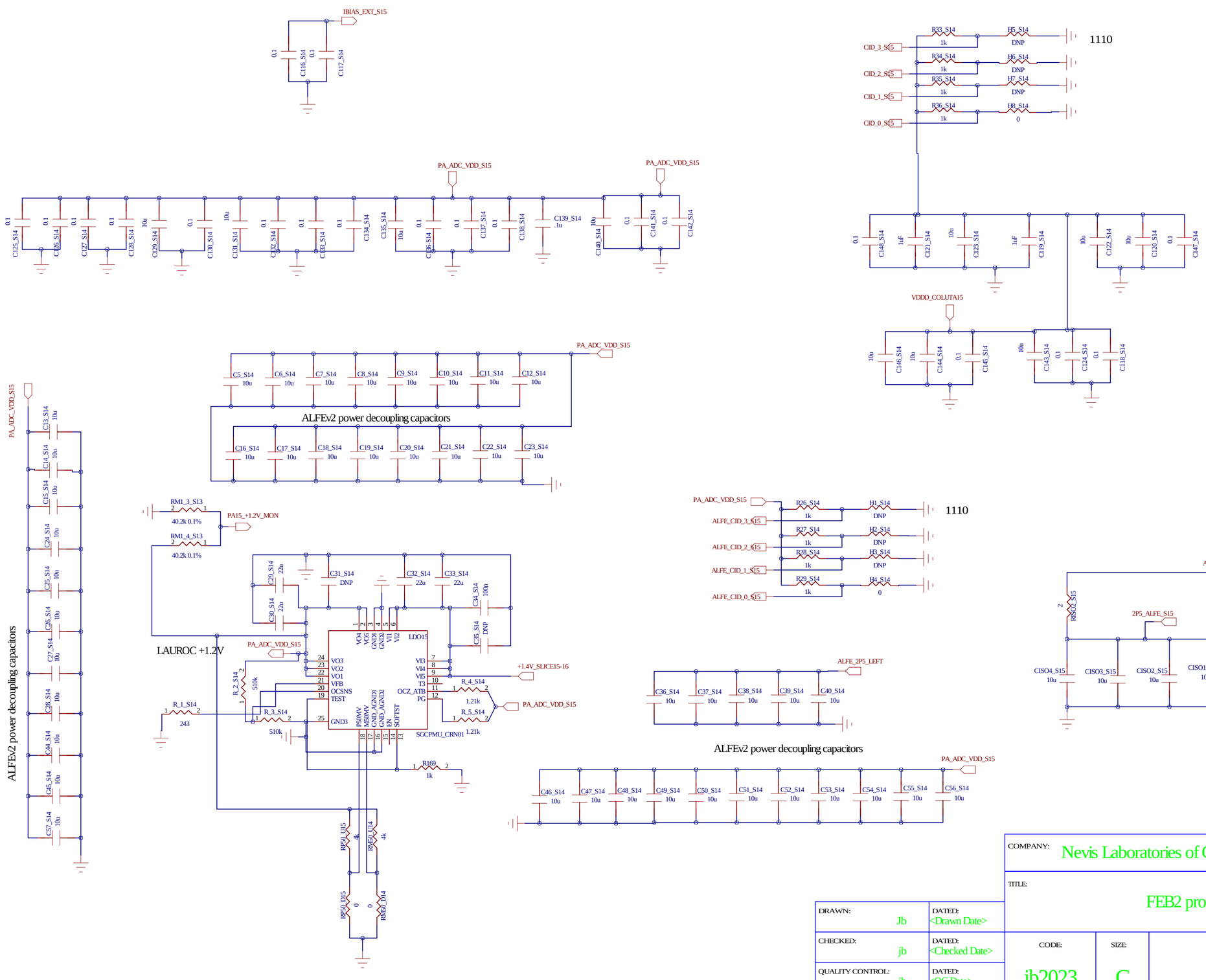

DRAWN: Jb	DATED: <Drawn Date>	COMPANY: Nevis Laboratories of Columbia University	
CHECKED: jb	DATED: <Checked Date>	TITLE: FEB2 prototype v2.0	
QUALITY CONTROL: jb	DATED: <QC Date>	CODE: jb2023	SIZE: C
RELEASED: jb	DATED: <Release Date>	DRAWING NO: 35	REV: v2.0
		SCALE: <Scale>	SHEET: 58 OF 155

REVISION RECORD			
LTR	ECO NO:	APPROVED:	DATE:

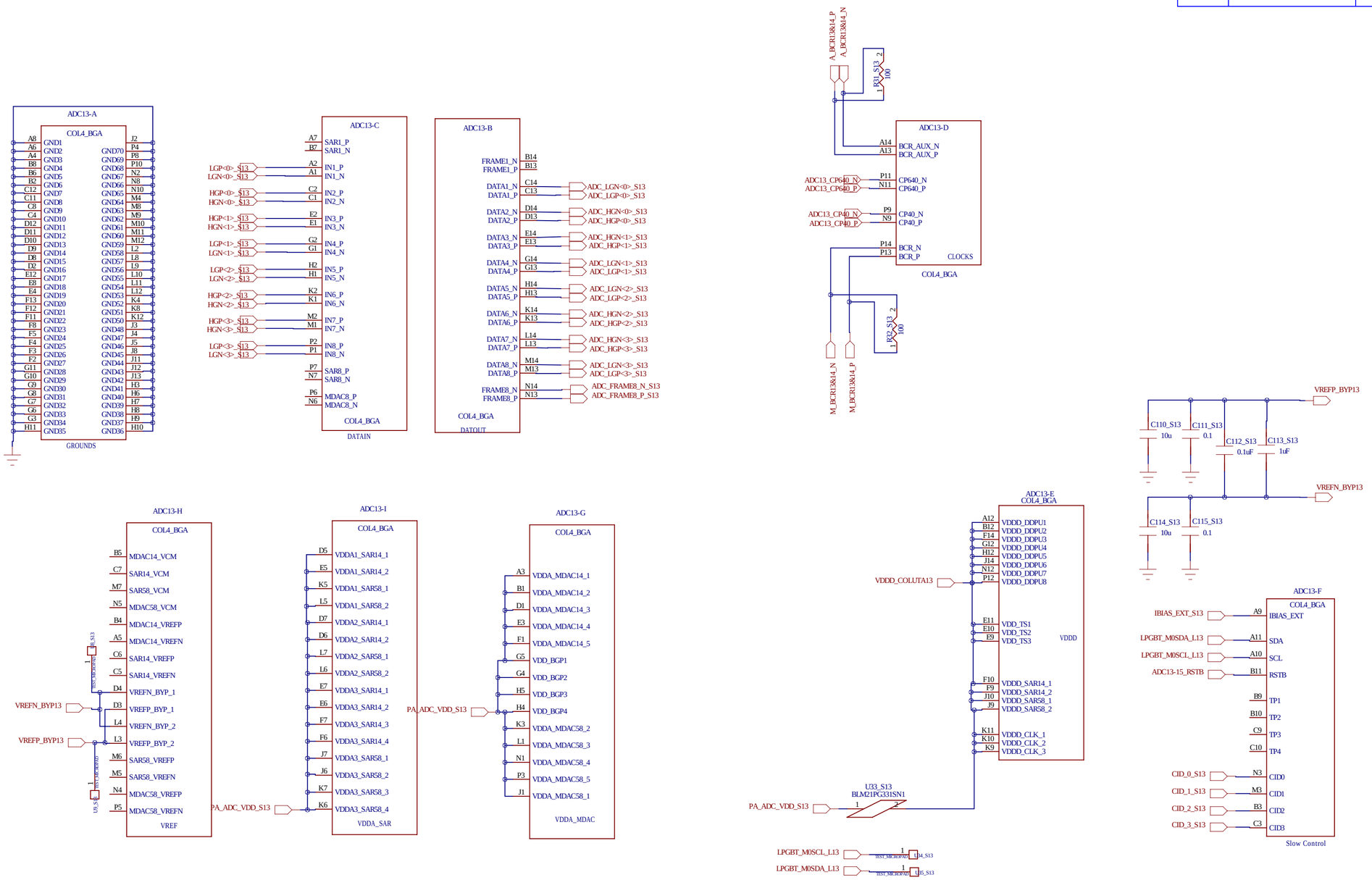

DRAWN: Jb	DATED: <Drawn Date>	COMPANY: Nevis Laboratories of Columbia University			
CHECKED: jb	DATED: <Checked Date>	TITLE: FEB2 prototype v2.0			
QUALITY CONTROL: jb	DATED: <QC Date>	CODE: jb2023	SIZE: C	DRAWING NO: 35	REV: v2.0
RELEASED: jb	DATED: <Release Date>	SCALE: <Scale>		SHEET: 50 OF 155	

REVISION RECORD			
LTR	ECO NO:	APPROVED:	DATE:

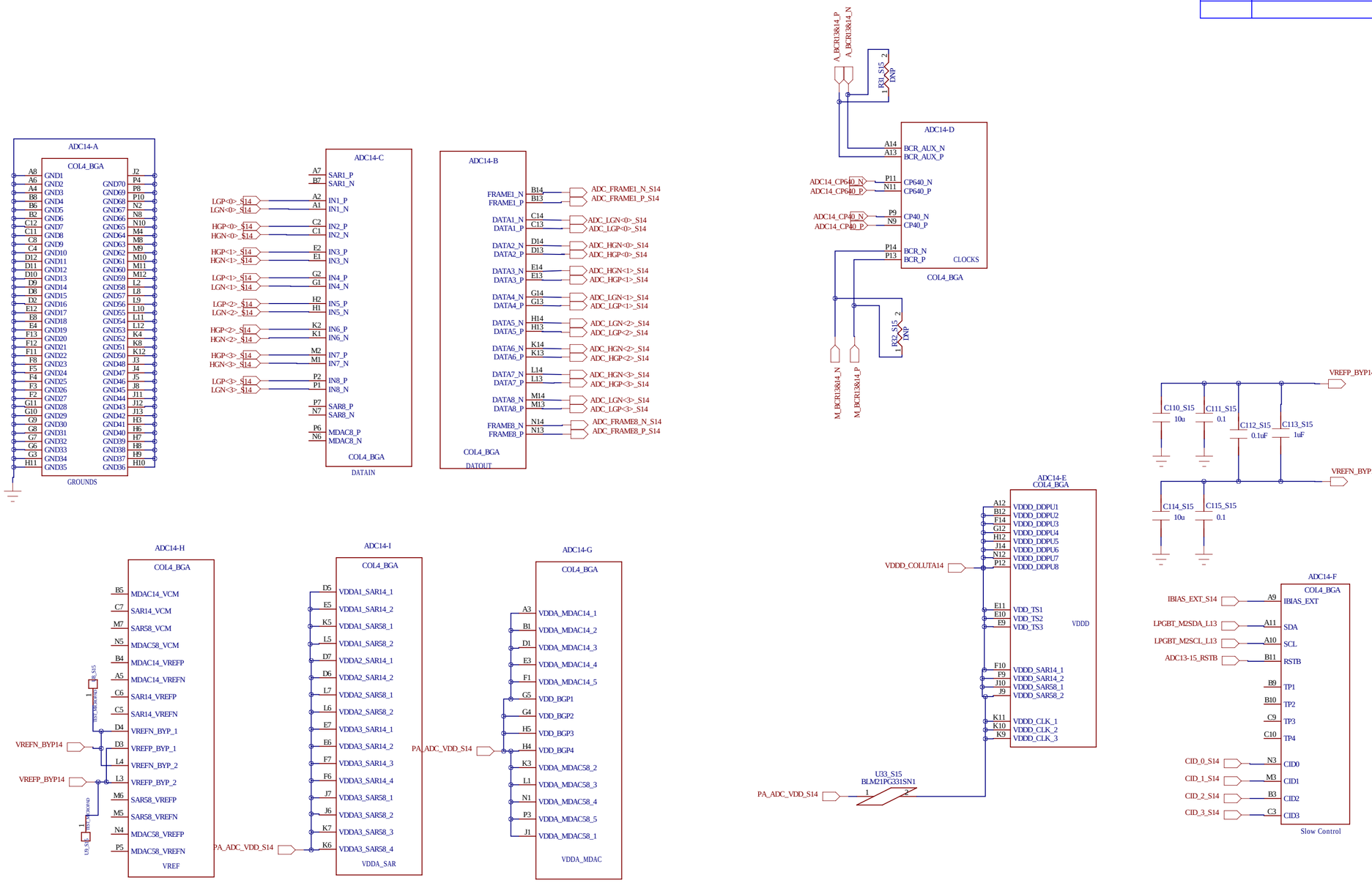

DRAWN: Jb	DATED: <Drawn Date>	COMPANY: Nevis Laboratories of Columbia University	
CHECKED: jb	DATED: <Checked Date>	TITLE: FEB2 prototype v2.0	
QUALITY CONTROL: jb	DATED: <QC Date>	CODE: jb2023	SIZE: C
RELEASED: jb	DATED: <Release Date>	DRAWING NO: 35	REV: v2.0
		SCALE: <Scale>	SHEET: 60 OF 155

REVISION RECORD			
LTR	ECO NO:	APPROVED:	DATE:

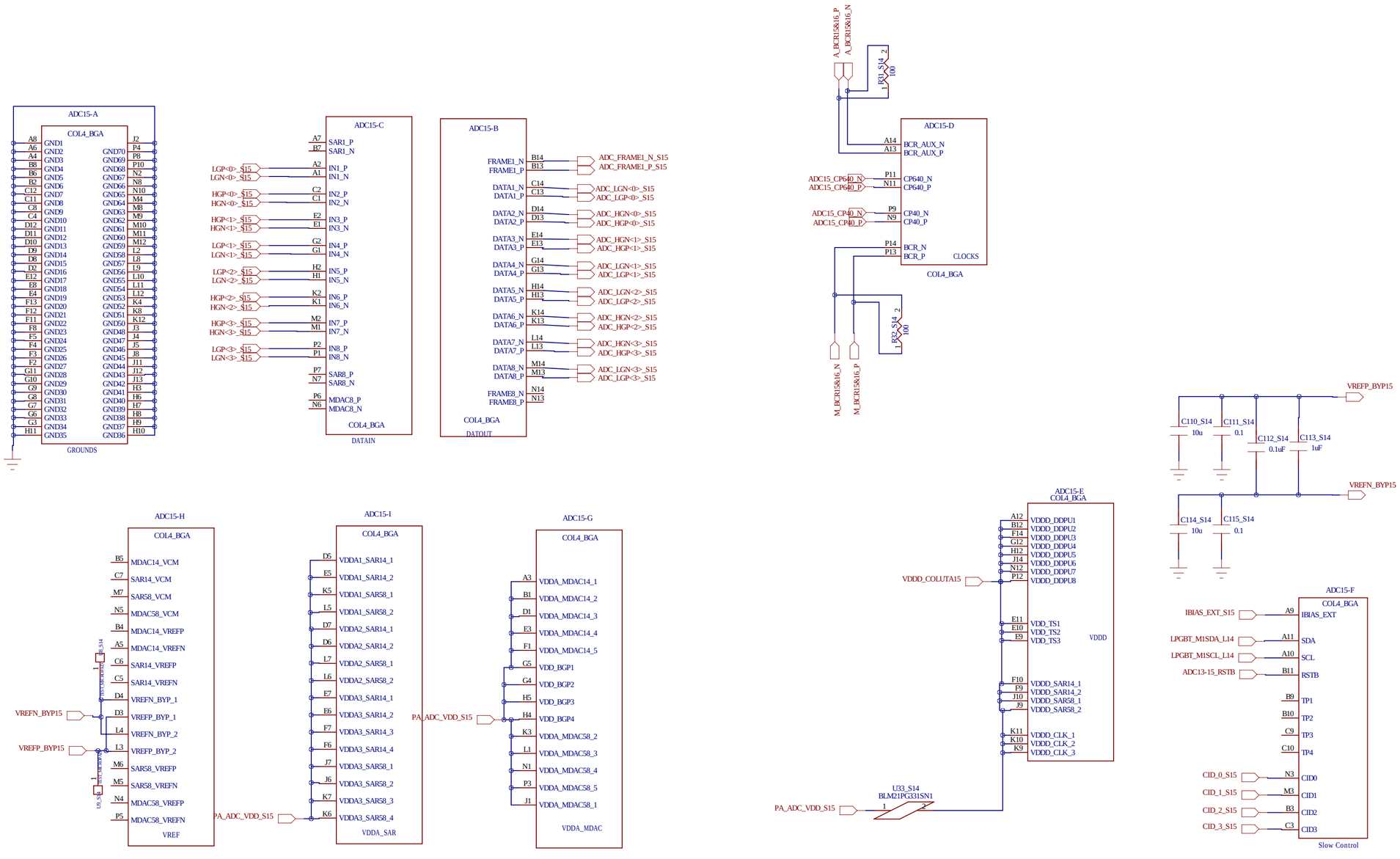

DRAWN: Jb	DATED: <Drawn Date>	COMPANY: Nevis Laboratories of Columbia University	
CHECKED: jb	DATED: <Checked Date>	TITLE: FEB2 prototype v2.0	
QUALITY CONTROL: jb	DATED: <QC Date>	CODE: jb2023	SIZE: C
RELEASED: jb	DATED: <Release Date>	DRAWING NO: 35	REV: v2.0
		SCALE: <Scale>	SHEET: 61 OF 155

REVISION RECORD			
LTR	ECO NO:	APPROVED:	DATE:

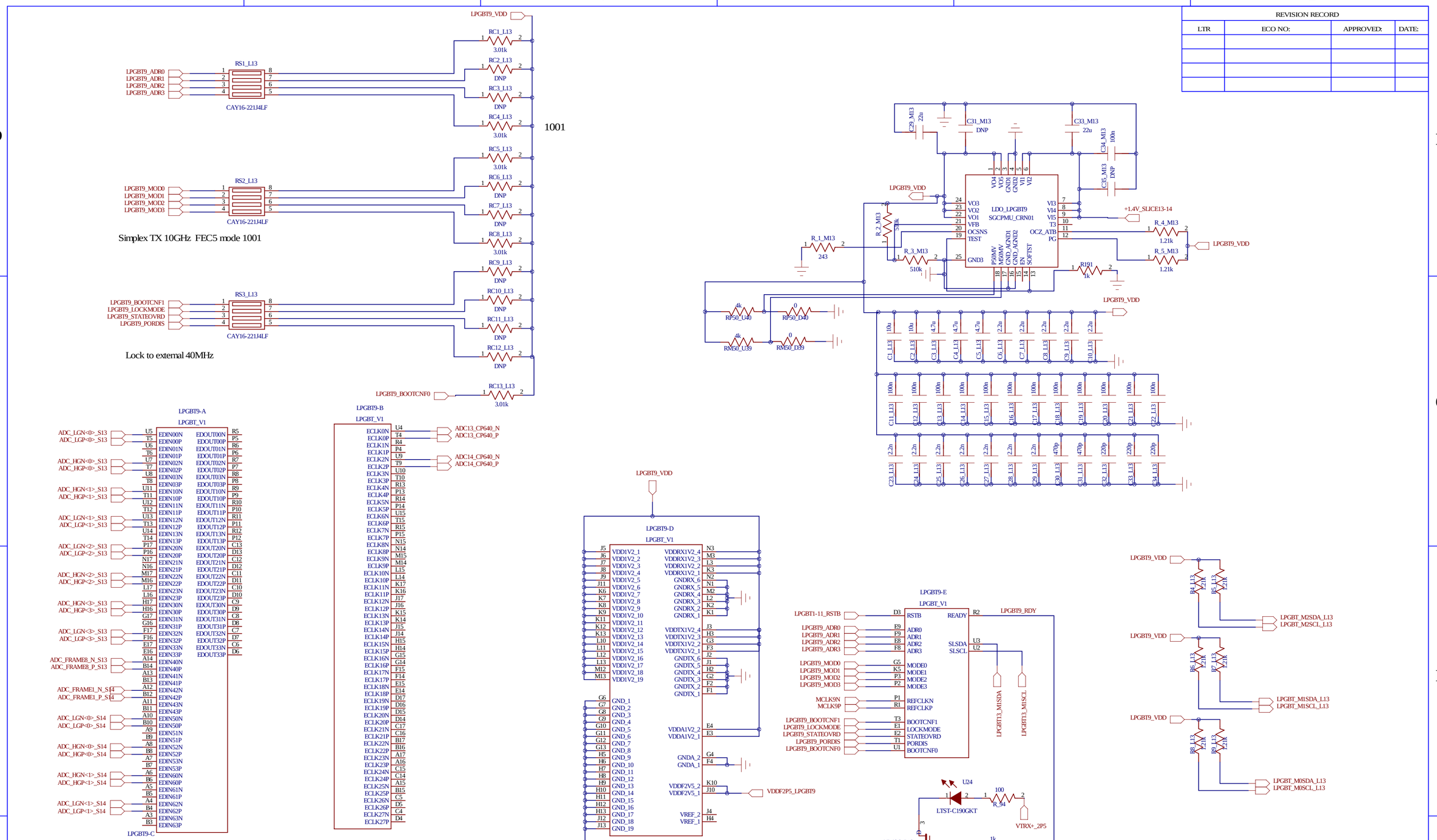

DRAWN: Jb	DATED: <Drawn Date>	COMPANY: Nevis Laboratories of Columbia University	
CHECKED: jb	DATED: <Checked Date>	TITLE: FEB2 prototype v2.0	
QUALITY CONTROL: jb	DATED: <QC Date>	CODE: jb2023	SIZE: C
RELEASED: jb	DATED: <Release Date>	DRAWING NO: 35	REV: v2.0
		SCALE: <Scale>	SHEET: 62 OF 155

REVISION RECORD			
LTR	ECO NO:	APPROVED:	DATE:

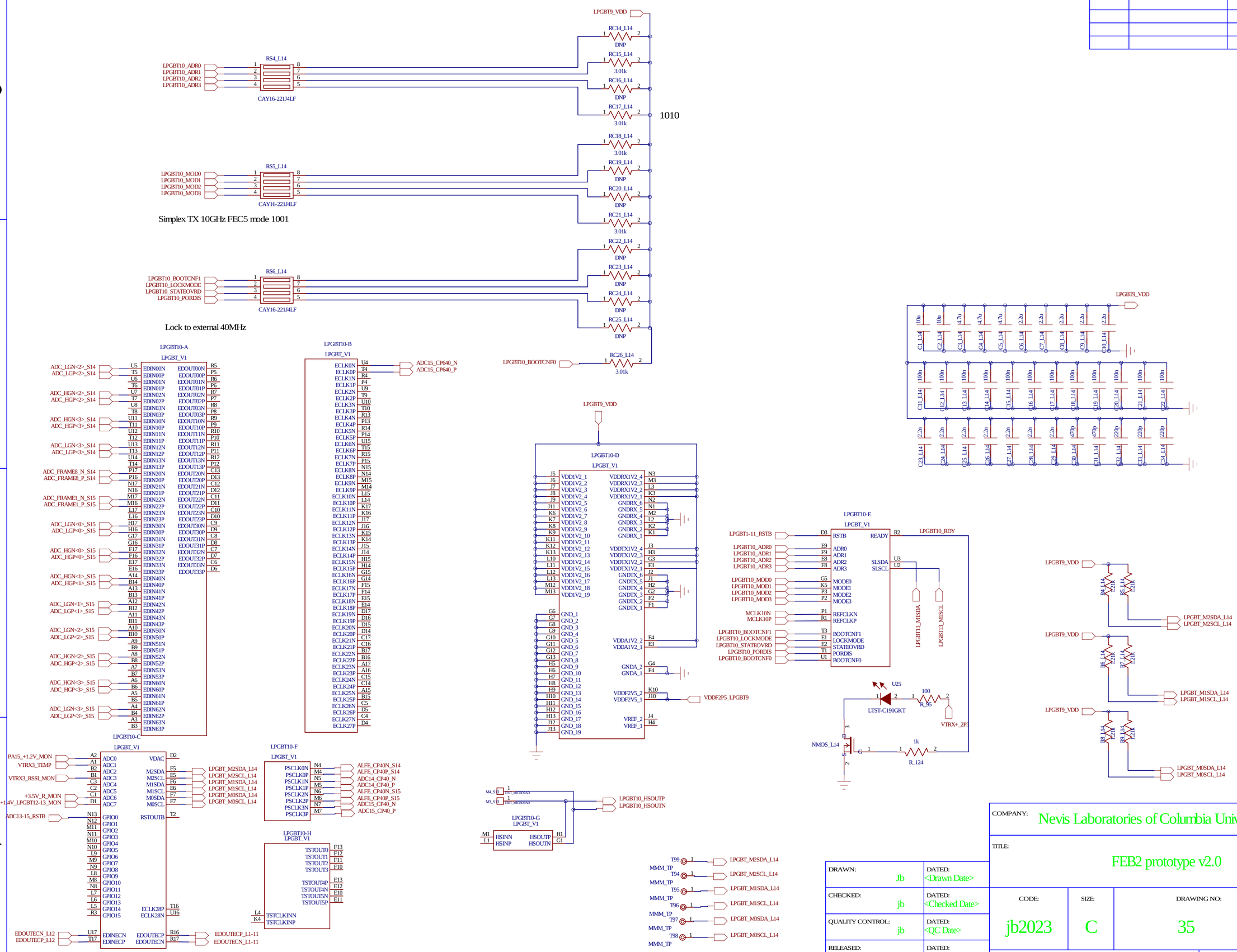

COMPANY:	Nevis Laboratories of Columbia University		
TITLE:	FEB2 prototype v2.0		
DRAWN: Jb	DATED: <Drawn Date>	CODE: jb2023	SIZE: C
CHECKED: jb	DATED: <Checked Date>	DRAWING NO: 35	REV: v2.0
QUALITY CONTROL: jb	DATED: <QC Date>		
RELEASED: jb	DATED: <Release Date>	SCALE: <Scale>	SHEET: 63 OF 155

REVISION RECORD			
LTR	ECO NO:	APPROVED:	DATE:

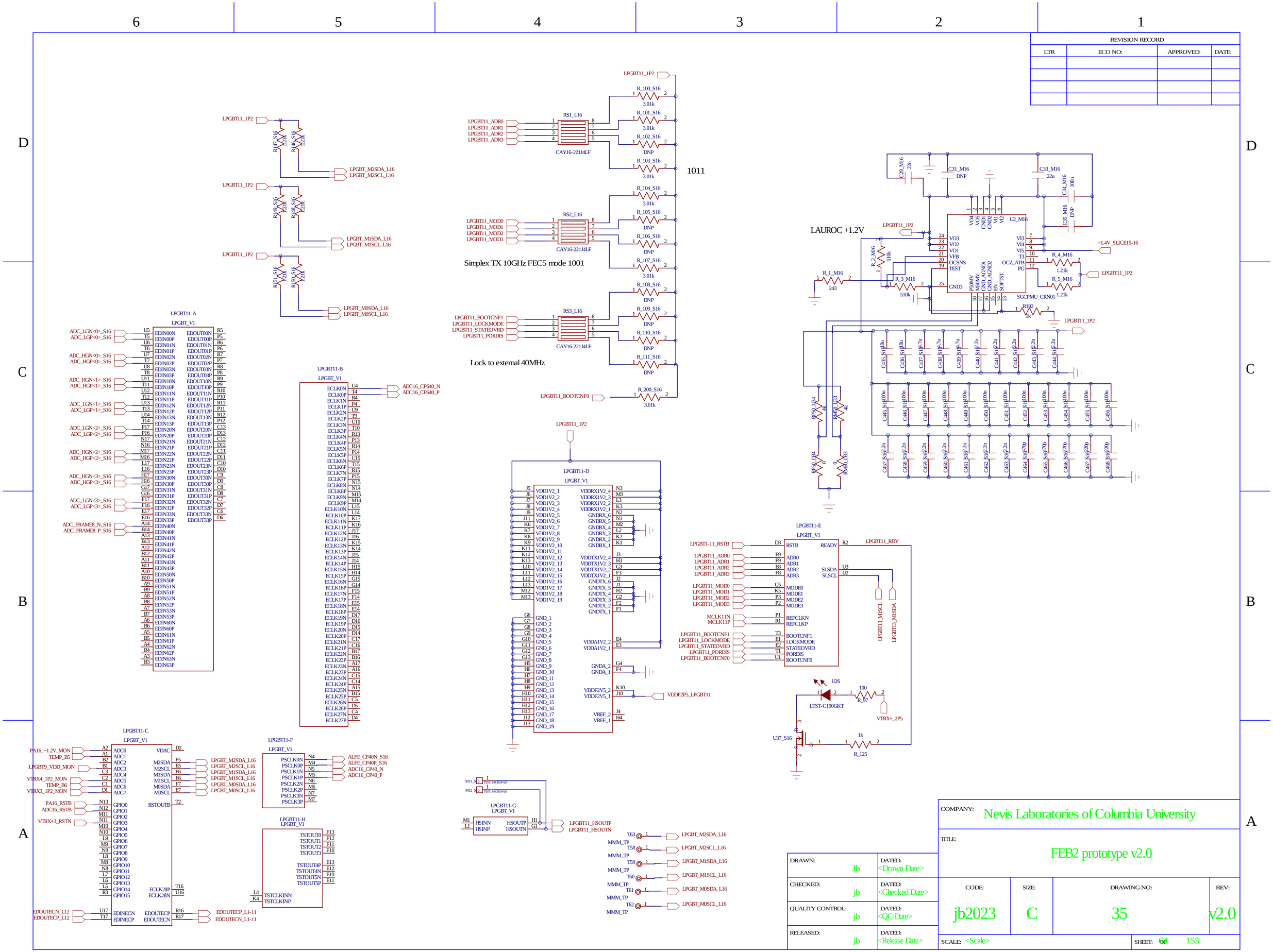

DRAWN: Jb	DATED: <Drawn Date>	COMPANY: Nevis Laboratories of Columbia University	
CHECKED: jb	DATED: <Checked Date>	TITLE: FEB2 prototype v2.0	
QUALITY CONTROL: jb	DATED: <QC Date>	CODE: jb2023 / SIZE: C / DRAWING NO: 35	REV: v2.0
RELEASED: jb	DATED: <Release Date>	SCALE: <Scale>	SHEET: 64 155

REVISION RECORD			
LTR	ECO NO:	APPROVED:	DATE:

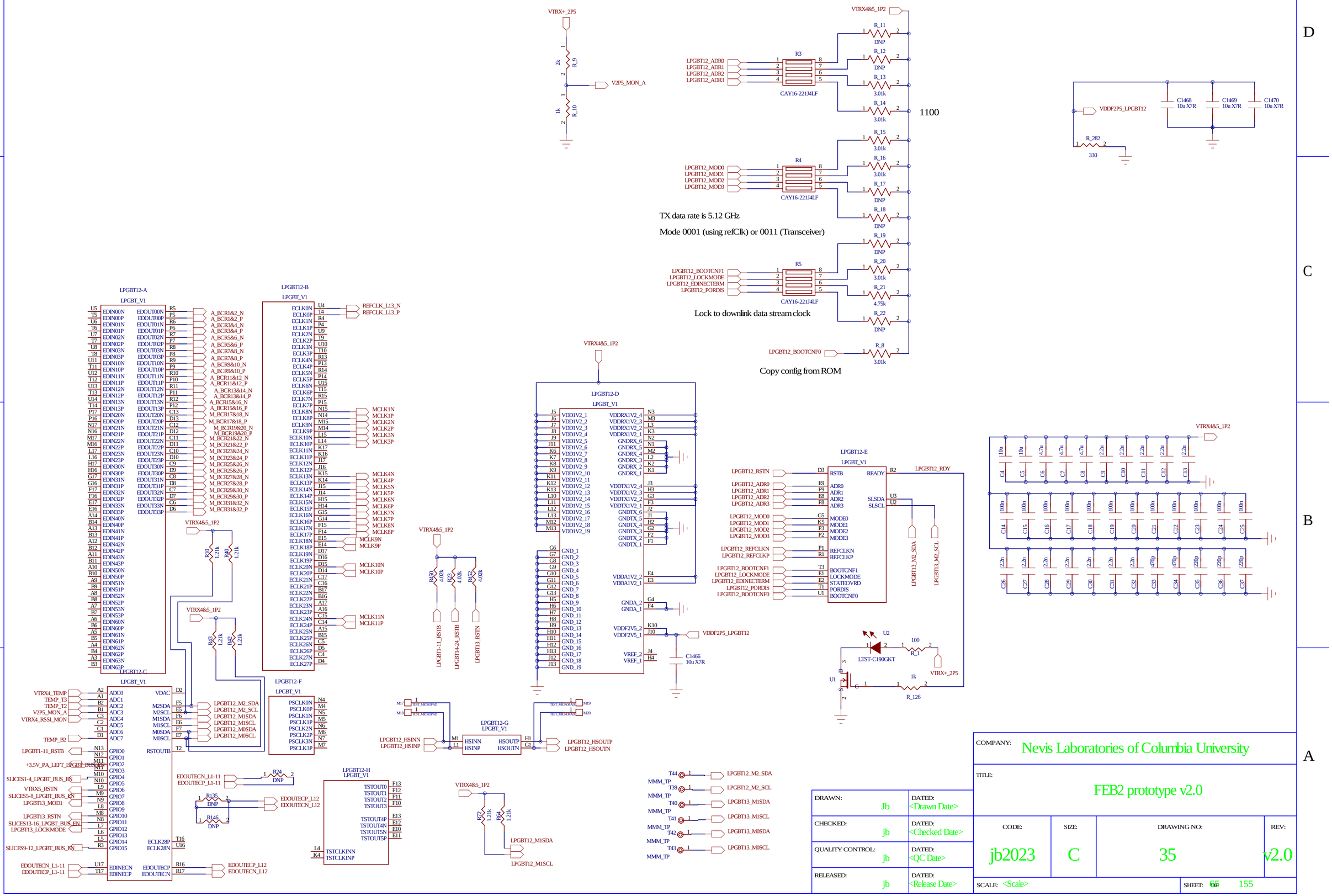

COMPANY: Nevis Laboratories of Columbia University			
TITLE: FEB2 prototype v2.0			
DRAWN: Jb	DATED: <Drawn Date>		
CHECKED: jb	DATED: <Checked Date>		
QUALITY CONTROL: jb	DATED: <QC Date>		
RELEASED: jb	DATED: <Release Date>		
CODE: jb2023	SIZE: C	DRAWING NO: 35	REV: v2.0
SCALE: <Scale>		SHEET: 65 OF 155	

REVISION RECORD			
LTR	ECO NO:	APPROVED:	DATE:

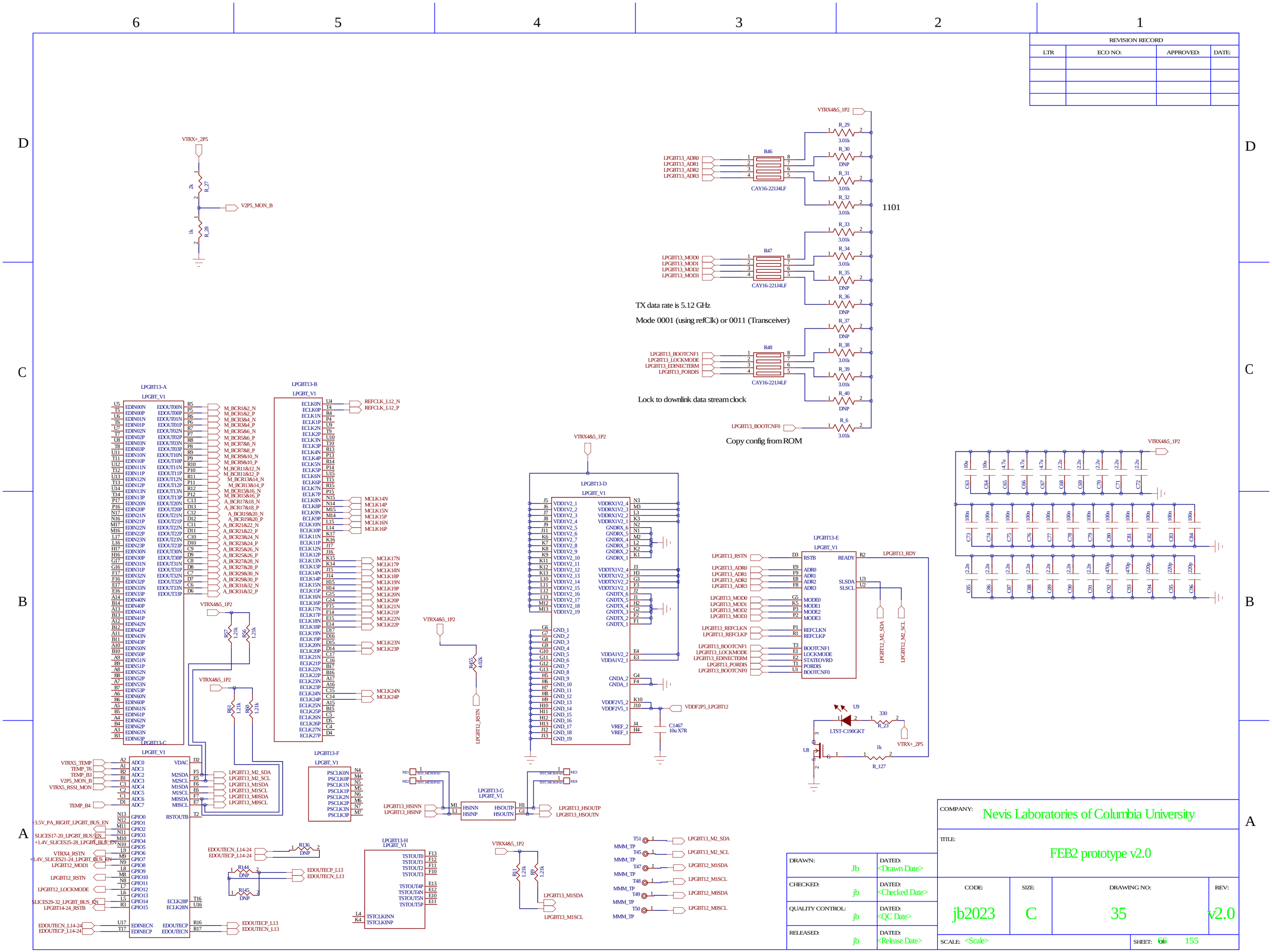

COMPANY:	Nevis Laboratories of Columbia University		
TITLE:	FEB2 prototype v2.0		
DRAWN: Jb	DATED: <Drawn Date>		
CHECKED: jb	DATED: <Checked Date>		
QUALITY CONTROL: jb	DATED: <QC Date>		
RELEASED: jb	DATED: <Release Date>		
CODE: jb2023	SIZE: C	DRAWING NO: 35	REV: v2.0
SCALE: <Scale>		SHEET: 66 155	

REVISION RECORD			
LTR	ECO NO:	APPROVED:	DATE:

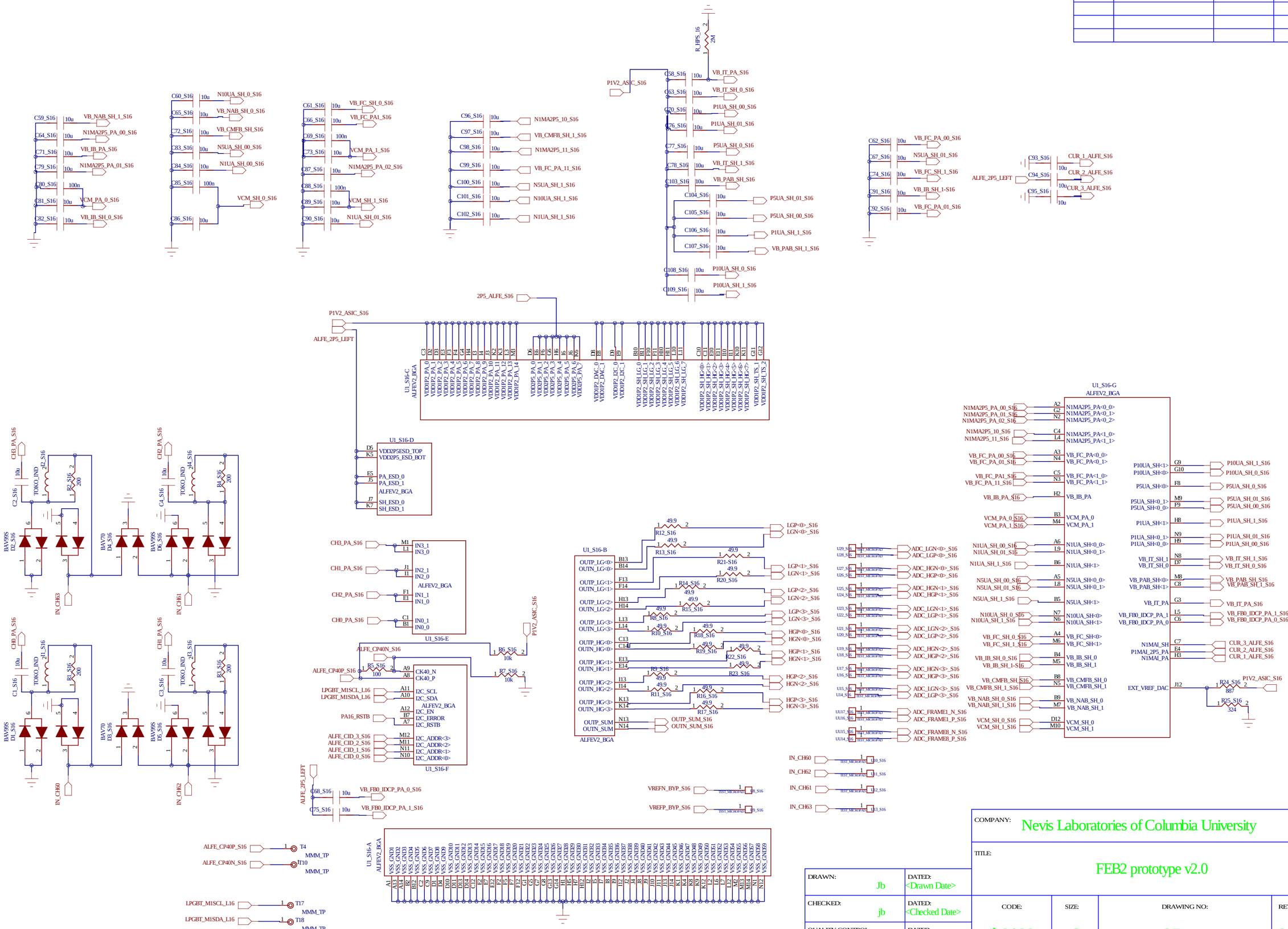

DRAWN: Jb	DATED: <Drawn Date>	COMPANY: Nevis Laboratories of Columbia University	
CHECKED: jb	DATED: <Checked Date>	TITLE: FEB2 prototype v2.0	
QUALITY CONTROL: jb	DATED: <QC Date>	CODE: jb2023	SIZE: C
RELEASED: jb	DATED: <Release Date>	DRAWING NO: 35	REV: v2.0
		SCALE: <Scale>	SHEET: 67 OF 155

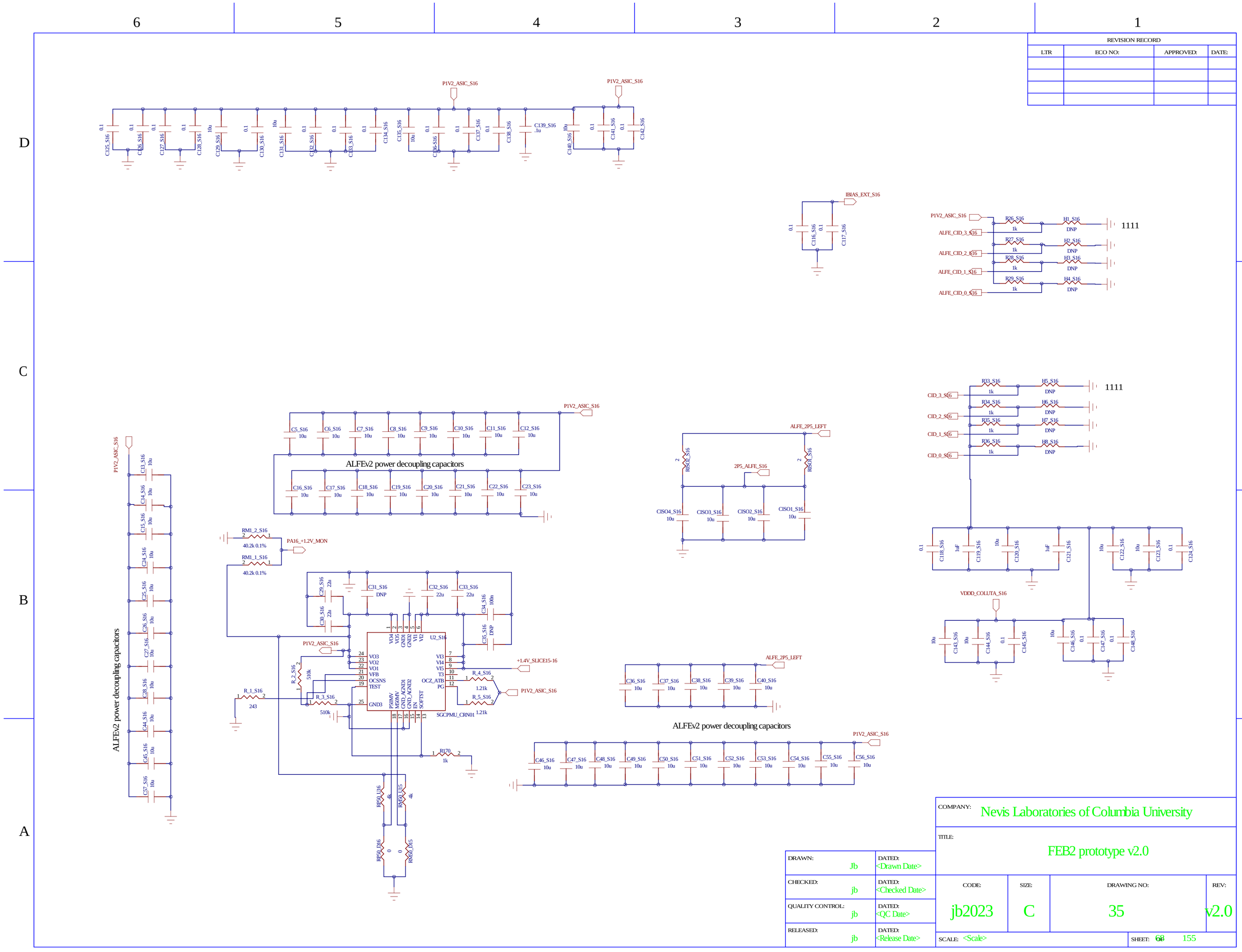

REVISION RECORD			
LTR	ECO NO:	APPROVED:	DATE:

DRAWN: Jb	DATED: <Drawn Date>	COMPANY: Nevis Laboratories of Columbia University	
CHECKED: jb	DATED: <Checked Date>	TITLE: FEB2 prototype v2.0	
QUALITY CONTROL: jb	DATED: <QC Date>	CODE: jb2023 / SIZE: C / DRAWING NO: 35	REV: v2.0
RELEASED: jb	DATED: <Release Date>	SCALE: <Scale>	SHEET: 68 of 155

REVISION RECORD			
LTR	ECO NO:	APPROVED:	DATE:

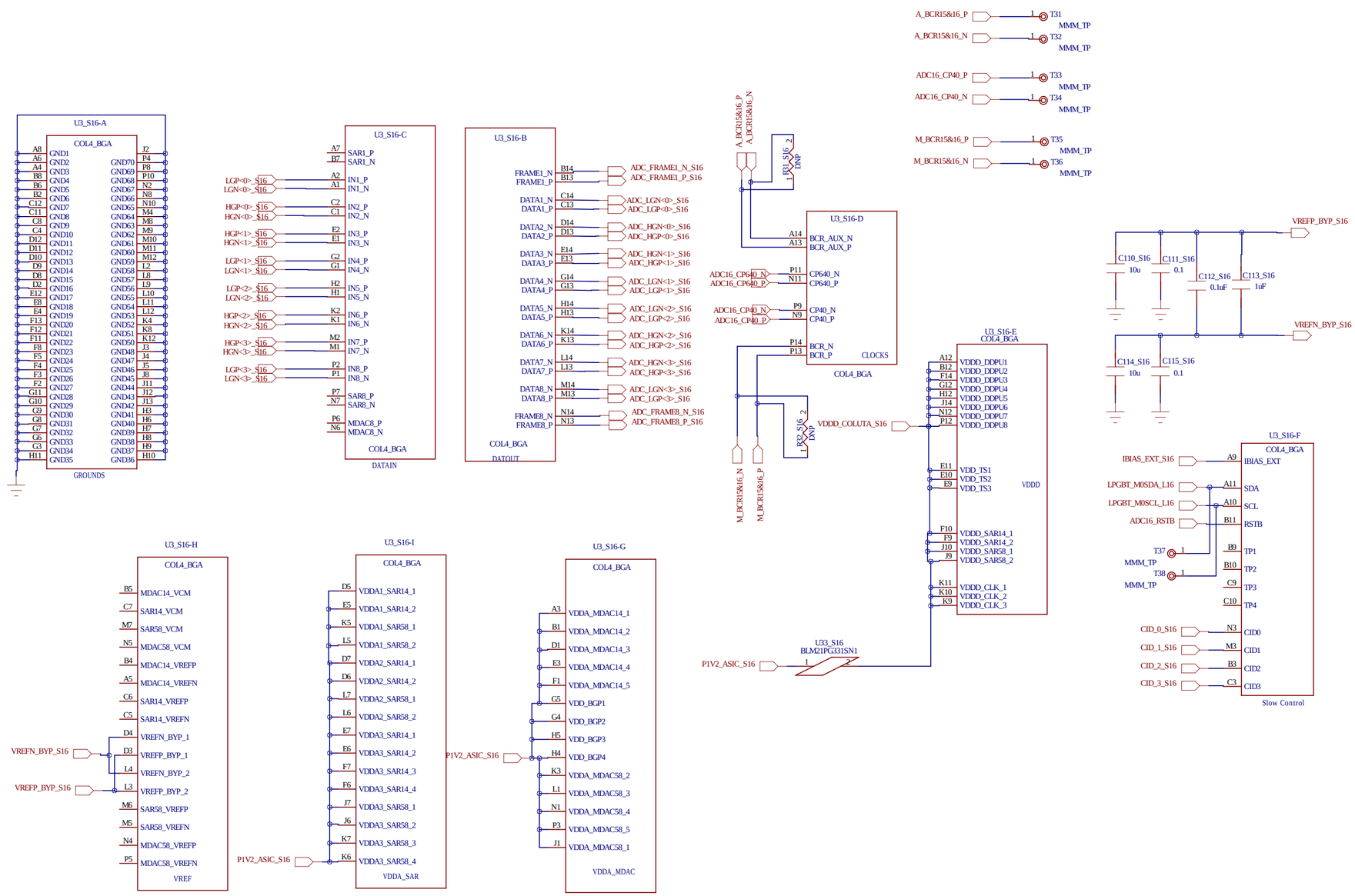

COMPANY: Nevis Laboratories of Columbia University			
TITLE: FEB2 prototype v2.0			
DRAWN: Jb	DATED: <Drawn Date>		
CHECKED: jb	DATED: <Checked Date>	CODE: jb2023	SIZE: C	DRAWING NO: 35	REV: v2.0
QUALITY CONTROL: jb	DATED: <QC Date>		
RELEASED: jb	DATED: <Release Date>	SCALE: <Scale>	SHEET: 60 OF 155

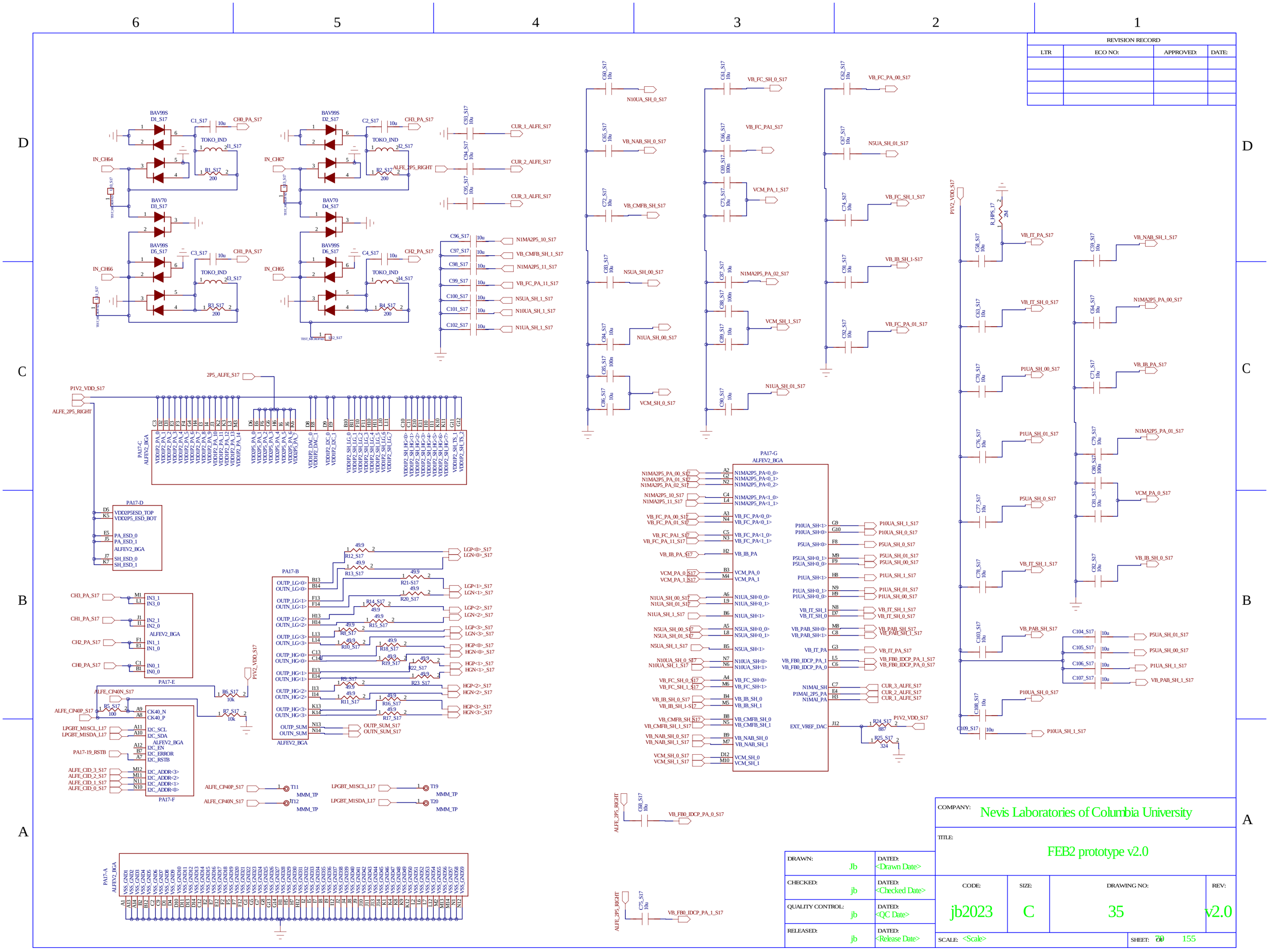
REVISION RECORD
LTR
ECO NO:
APPROVED:
DATE:
BAV99S
BAV70
TOKO_IND
IN_CH64
IN_CH67
IN_CH66
IN_CH65
CH0_PA_S17
CH1_PA_S17
CH2_PA_S17
CH3_PA_S17
CUR_1_ALFE_S17
CUR_2_ALFE_S17
CUR_3_ALFE_S17
ALFE_2P5_RIGHT
N1MA2P5_10_S17
VB_CMFB_SH_1_S17
N1MA2P5_11_S17
VB_FC_PA_11_S17
N5UA_SH_1_S17
N10UA_SH_1_S17
N1UA_SH_1_S17
N10UA_SH_0_S17
VB_NAB_SH_0_S17
VB_CMFB_SH_S17
N5UA_SH_00_S17
N1UA_SH_00_S17
VCM_SH_0_S17
VB_FC_SH_0_S17
VB_FC_PA1_S17
VCM_PA_1_S17
N1MA2P5_PA_02_S17
VCM_SH_1_S17
N1UA_SH_01_S17
VB_FC_PA_00_S17
N5UA_SH_01_S17
VB_FC_SH_1_S17
VB_IB_SH_1-S17
VB_FC_PA_01_S17
P1V2_VDD_S17
R_HPS_17
VB_IT_PA_S17
VB_IT_SH_0_S17
P1UA_SH_00_S17
P1UA_SH_01_S17
P5UA_SH_0_S17
VB_IT_SH_1_S17
VB_PAB_SH_S17
P10UA_SH_0_S17
P10UA_SH_1_S17
VB_NAB_SH_1_S17
N1MA2P5_PA_00_S17
VB_IB_PA_S17
N1MA2P5_PA_01_S17
VCM_PA_0_S17
VB_IB_SH_0_S17
P5UA_SH_01_S17
P5UA_SH_00_S17
P1UA_SH_1_S17
VB_PAB_SH_1_S17
PA17-C
ALFEV2_BGA
PA17-D
PA17-E
PA17-F
PA17-G
PA17-B
PA17-A
ALFE_CP40N_S17
ALFE_CP40P_S17
LPGBT_M1SCL_L17
LPGBT_M1SDA_L17
PA17-19_RSTB
ALFE_CID_3_S17
ALFE_CID_2_S17
ALFE_CID_1_S17
ALFE_CID_0_S17
VB_FB0_IDCP_PA_0_S17
VB_FB0_IDCP_PA_1_S17
COMPANY:
Nevis Laboratories of Columbia University
TITLE:
FEB2 prototype v2.0
DRAWN: Jb
DATED: <Drawn Date>
CHECKED: jb
DATED: <Checked Date>
QUALITY CONTROL: jb
DATED: <QC Date>
RELEASED: jb
DATED: <Release Date>
CODE: jb2023
SIZE: C
DRAWING NO: 35
REV: v2.0
SCALE: <Scale>
SHEET: 70 OF 155

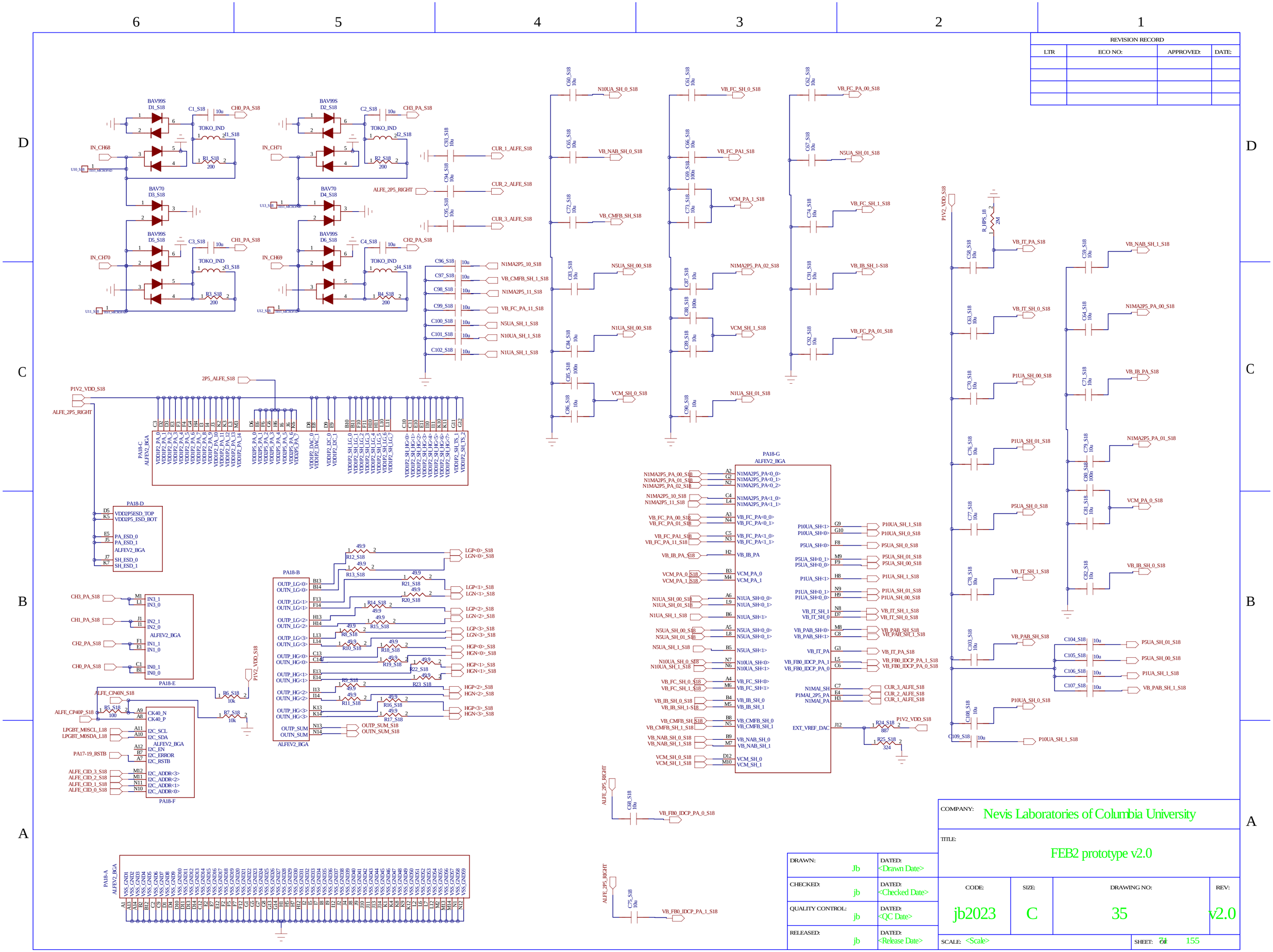

REVISION RECORD			
LTR	ECO NO:	APPROVED:	DATE:

COMPANY: Nevis Laboratories of Columbia University

TITLE: FEB2 prototype v2.0

DRAWN: Jb	DATED: <Drawn Date>		
CHECKED: jb	DATED: <Checked Date>		
QUALITY CONTROL: jb	DATED: <QC Date>		
RELEASED: jb	DATED: <Release Date>		

CODE:	SIZE:	DRAWING NO:	REV:
jb2023	C	35	v2.0

SCALE: <Scale> SHEET: 71 OF 155

REVISION RECORD			
LTR	ECO NO:	APPROVED:	DATE:

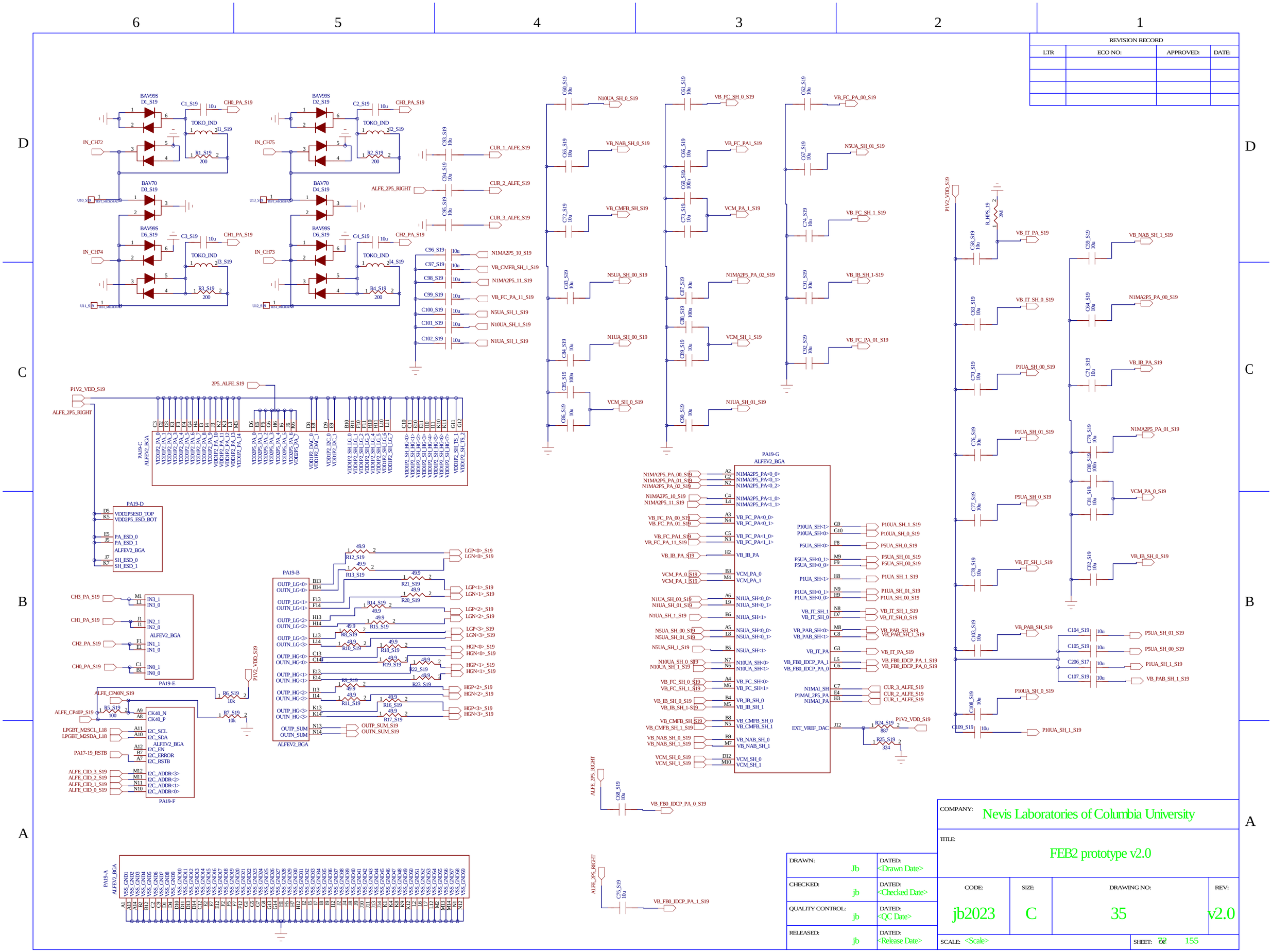

DRAWN: Jb	DATED: <Drawn Date>	COMPANY: Nevis Laboratories of Columbia University	
CHECKED: jb	DATED: <Checked Date>	TITLE: FEB2 prototype v2.0	
QUALITY CONTROL: jb	DATED: <QC Date>	CODE: jb2023	SIZE: C
RELEASED: jb	DATED: <Release Date>	DRAWING NO: 35	REV: v2.0
		SCALE: <Scale>	SHEET: 72 OF 155

REVISION RECORD			
LTR	ECO NO:	APPROVED:	DATE:

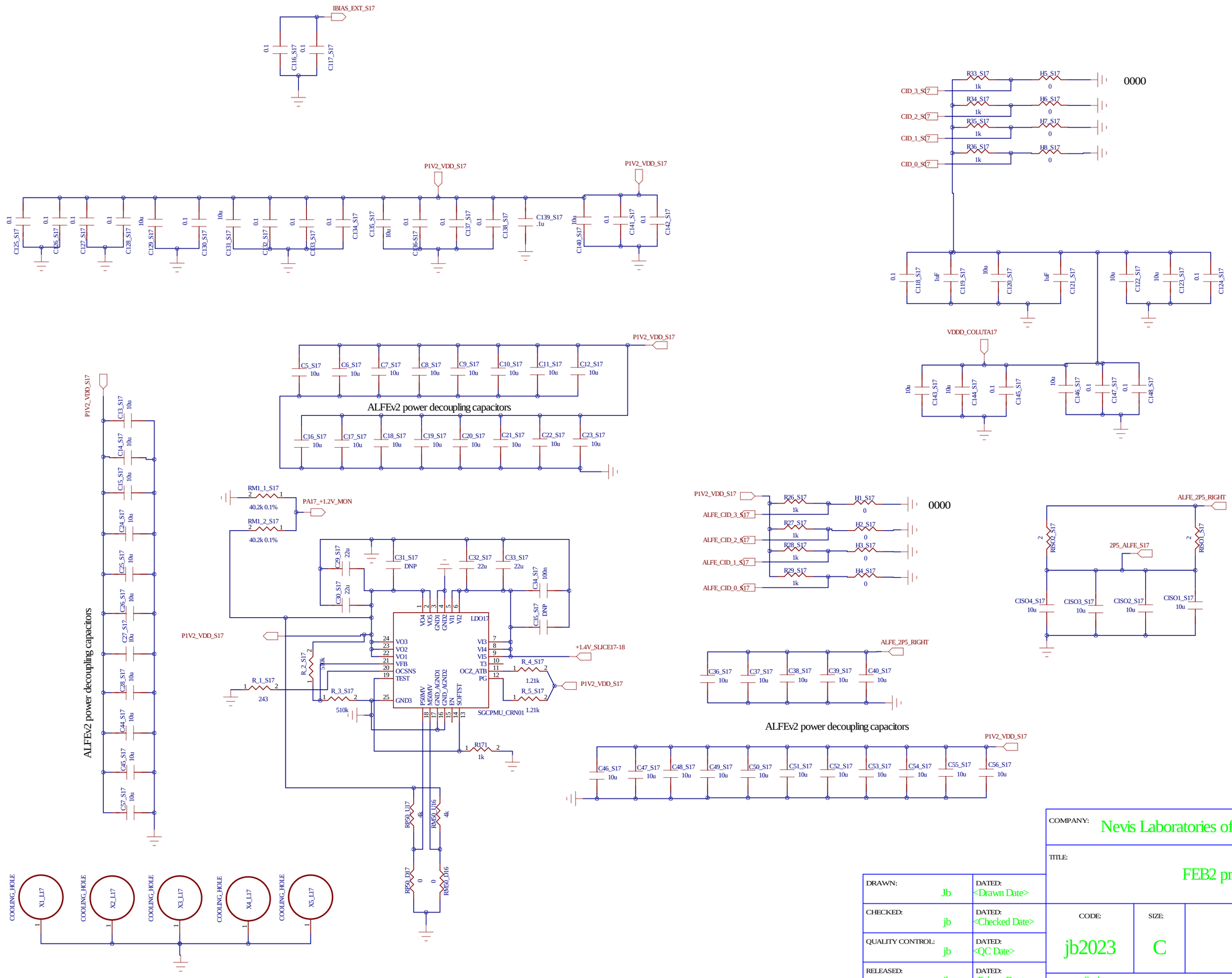

DRAWN: Jb	DATED: <Drawn Date>	COMPANY: Nevis Laboratories of Columbia University	
CHECKED: jb	DATED: <Checked Date>	TITLE: FEB2 prototype v2.0	
QUALITY CONTROL: jb	DATED: <QC Date>	CODE: jb2023	SIZE: C
RELEASED: jb	DATED: <Release Date>	DRAWING NO: 35	REV: v2.0
		SCALE: <Scale>	SHEET: 73 OF 155

REVISION RECORD			
LTR	ECO NO:	APPROVED:	DATE:

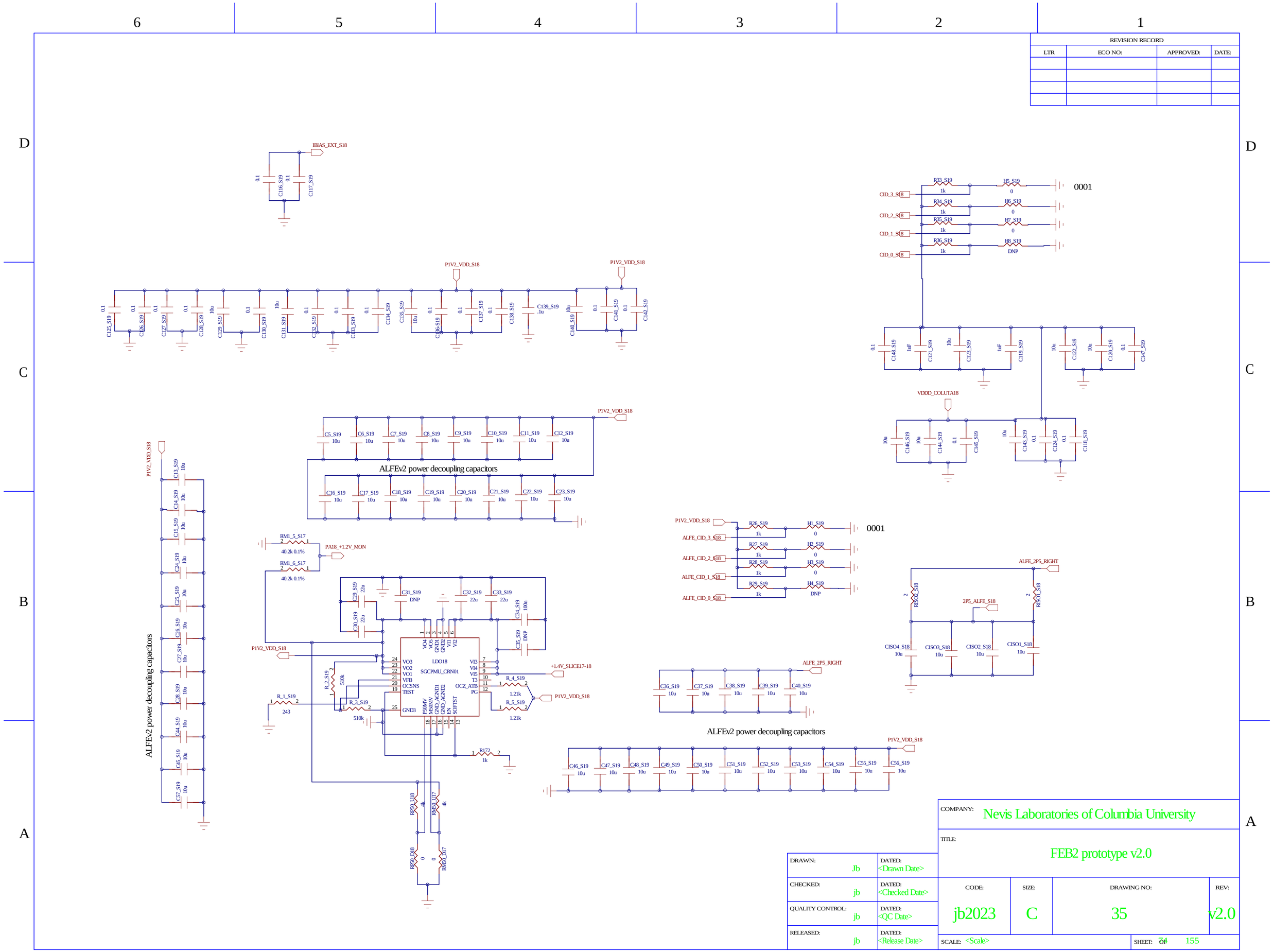

DRAWN: Jb	DATED: <Drawn Date>	COMPANY: Nevis Laboratories of Columbia University	
CHECKED: jb	DATED: <Checked Date>	TITLE: FEB2 prototype v2.0	
QUALITY CONTROL: jb	DATED: <QC Date>	CODE: jb2023	SIZE: C
RELEASED: jb	DATED: <Release Date>	DRAWING NO: 35	REV: v2.0
		SCALE: <Scale>	SHEET: 34 OF 155

REVISION RECORD			
LTR	ECO NO:	APPROVED:	DATE:

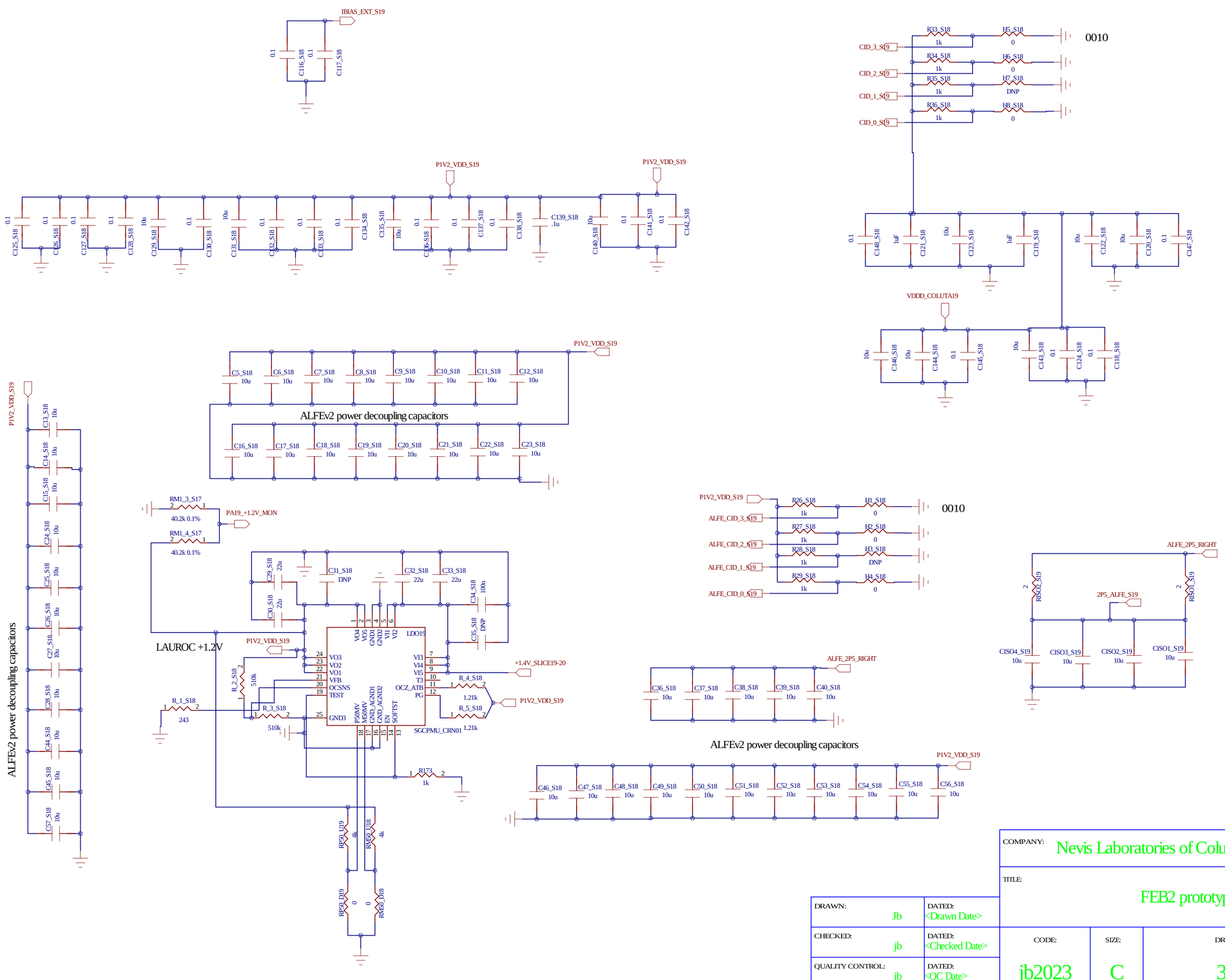

DRAWN: Jb	DATED: <Drawn Date>	COMPANY: Nevis Laboratories of Columbia University	
CHECKED: jb	DATED: <Checked Date>	TITLE: FEB2 prototype v2.0	
QUALITY CONTROL: jb	DATED: <QC Date>	CODE: jb2023	SIZE: C
RELEASED: jb	DATED: <Release Date>	DRAWING NO: 35	REV: v2.0
		SCALE: <Scale>	SHEET: 155 OF 155

REVISION RECORD			
LTR	ECO NO:	APPROVED:	DATE:

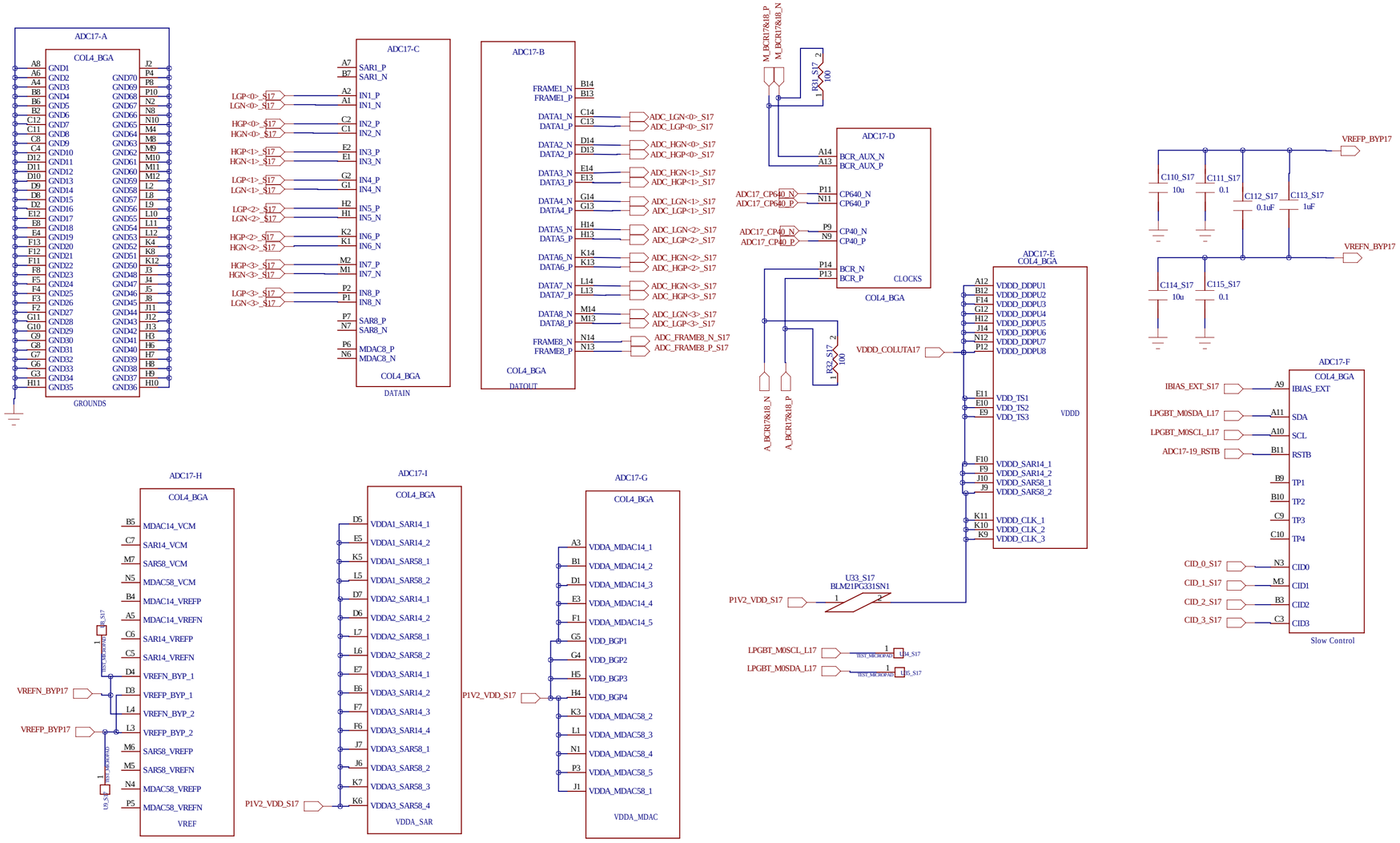

COMPANY: Nevis Laboratories of Columbia University			
TITLE: FEB2 prototype v2.0			
DRAWN: Jb	DATED: <Drawn Date>		
CHECKED: jb	DATED: <Checked Date>		
QUALITY CONTROL: jb	DATED: <QC Date>		
RELEASED: jb	DATED: <Release Date>		
CODE: jb2023	SIZE: C	DRAWING NO: 35	REV: v2.0
SCALE: <Scale>		SHEET: 06	155

REVISION RECORD			
LTR	ECO NO:	APPROVED:	DATE:

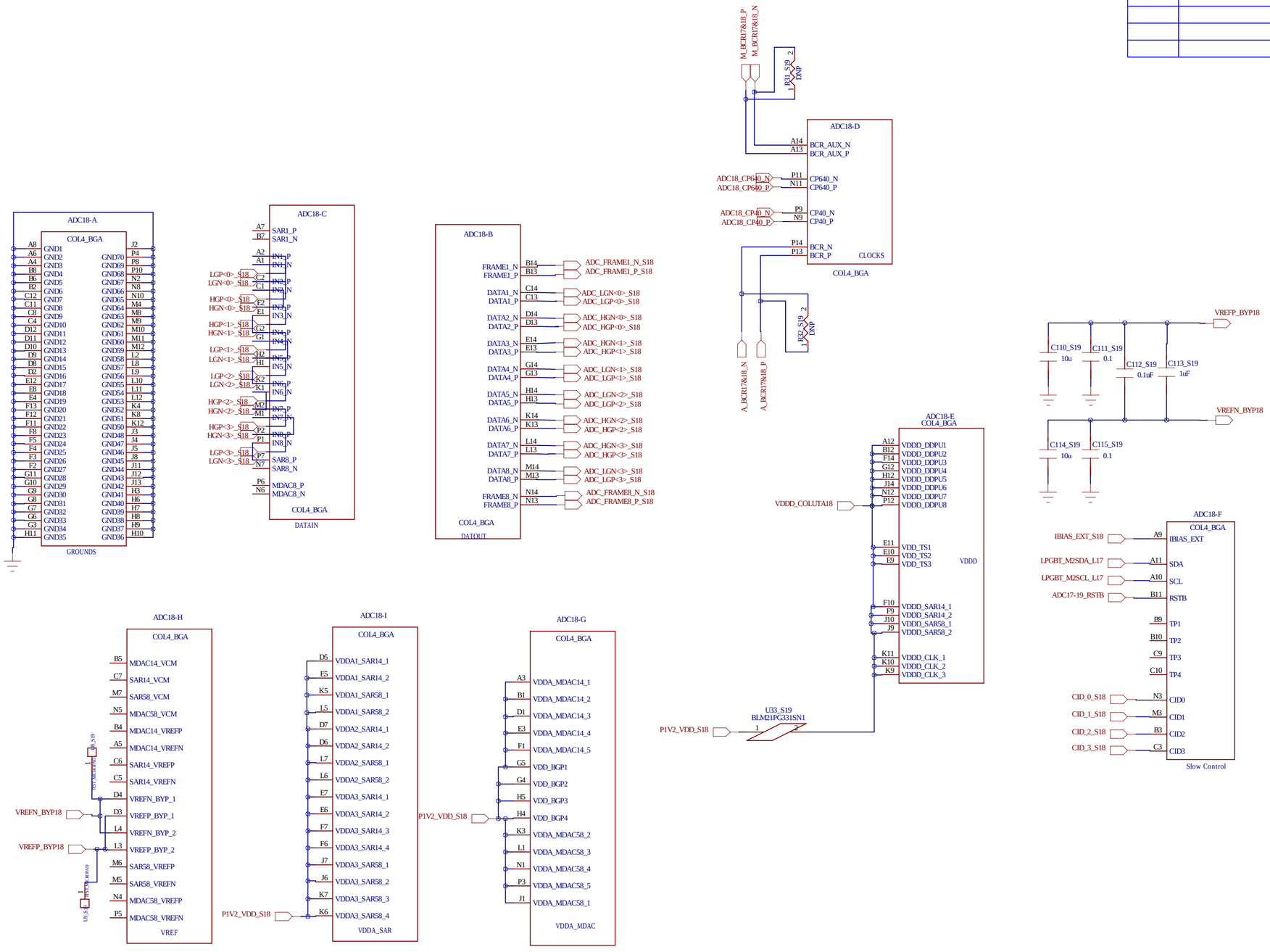

DRAWN: Jb	DATED: <Drawn Date>	COMPANY: Nevis Laboratories of Columbia University	
CHECKED: jb	DATED: <Checked Date>	TITLE: FEB2 prototype v2.0	
QUALITY CONTROL: jb	DATED: <QC Date>	CODE: jb2023	SIZE: C
RELEASED: jb	DATED: <Release Date>	DRAWING NO: 35	REV: v2.0
		SCALE: <Scale>	SHEET: 77 OF 155

REVISION RECORD			
LTR	ECO NO:	APPROVED:	DATE:

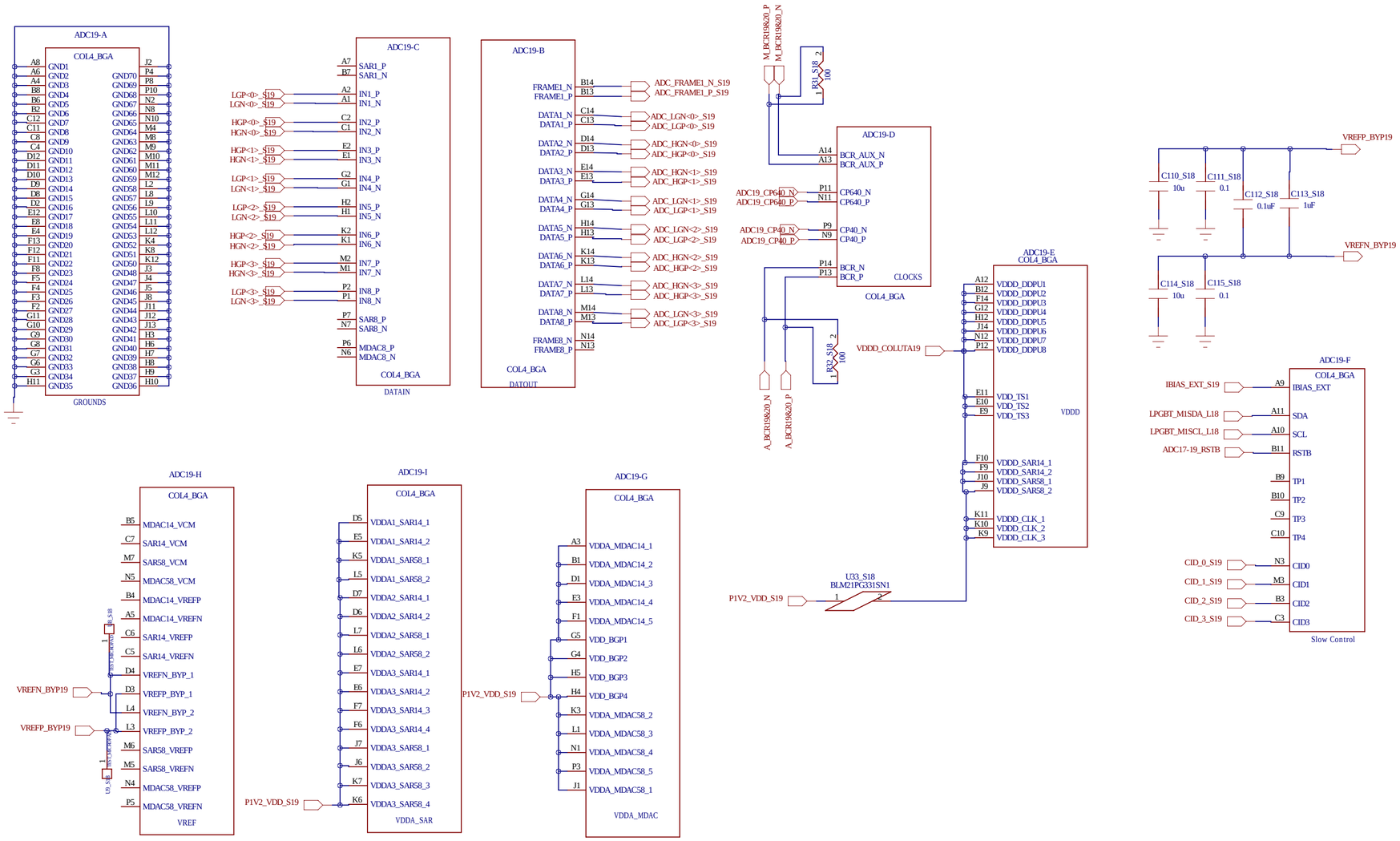

COMPANY: Nevis Laboratories of Columbia University			
TITLE: FEB2 prototype v2.0			
DRAWN: Jb	DATED: <Drawn Date>		
CHECKED: jb	DATED: <Checked Date>		
QUALITY CONTROL: jb	DATED: <QC Date>		
RELEASED: jb	DATED: <Release Date>		
CODE: jb2023	SIZE: C	DRAWING NO: 35	REV: v2.0
SCALE: <Scale>		SHEET: 78 OF 155	

REVISION RECORD			
LTR	ECO NO:	APPROVED:	DATE:

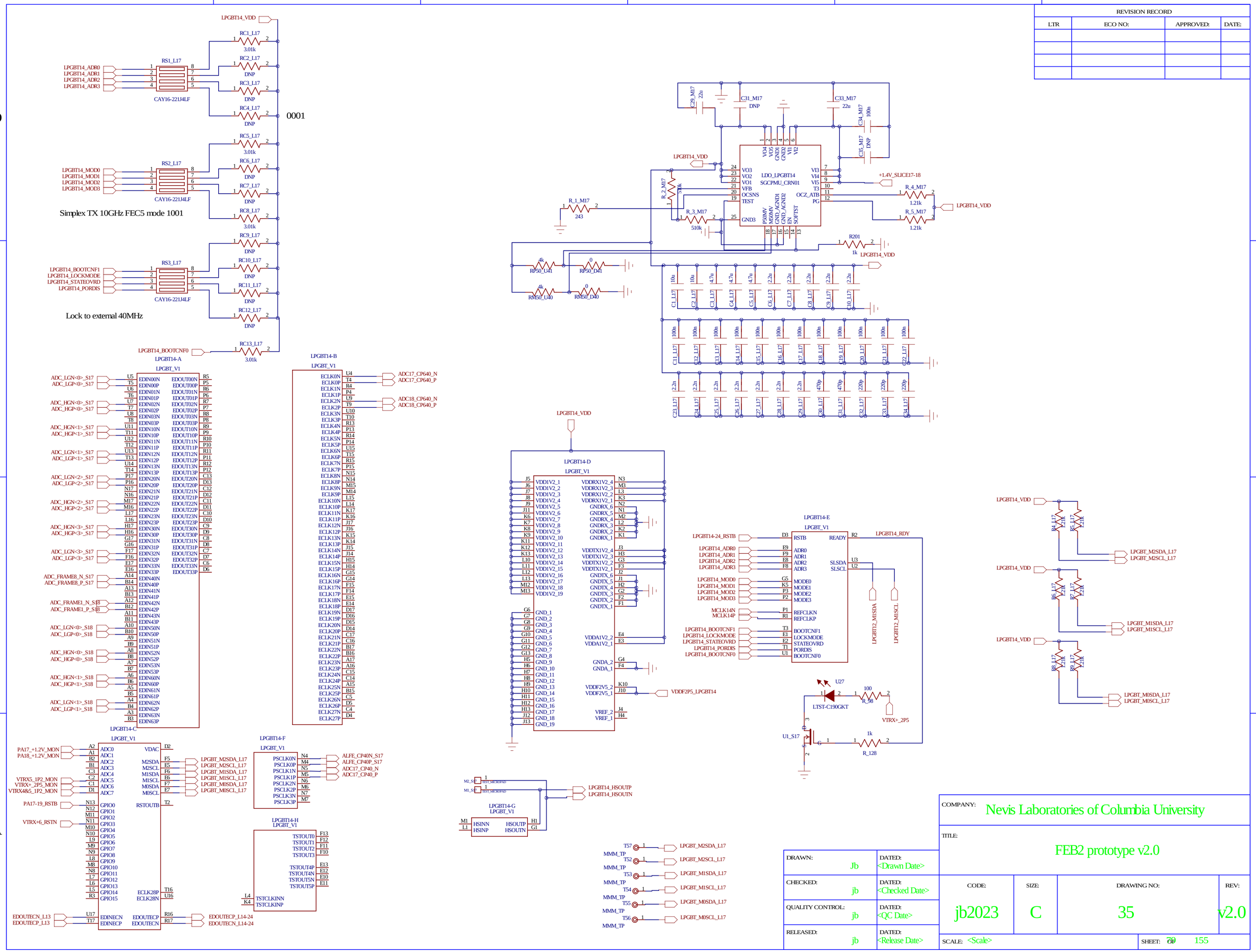

DRAWN: Jb	DATED: <Drawn Date>	COMPANY: Nevis Laboratories of Columbia University	
CHECKED: jb	DATED: <Checked Date>	TITLE: FEB2 prototype v2.0	
QUALITY CONTROL: jb	DATED: <QC Date>	CODE: jb2023	SIZE: C
RELEASED: jb	DATED: <Release Date>	DRAWING NO: 35	REV: v2.0
		SCALE: <Scale>	SHEET: 79 OF 155

REVISION RECORD			
LTR	ECO NO:	APPROVED:	DATE:

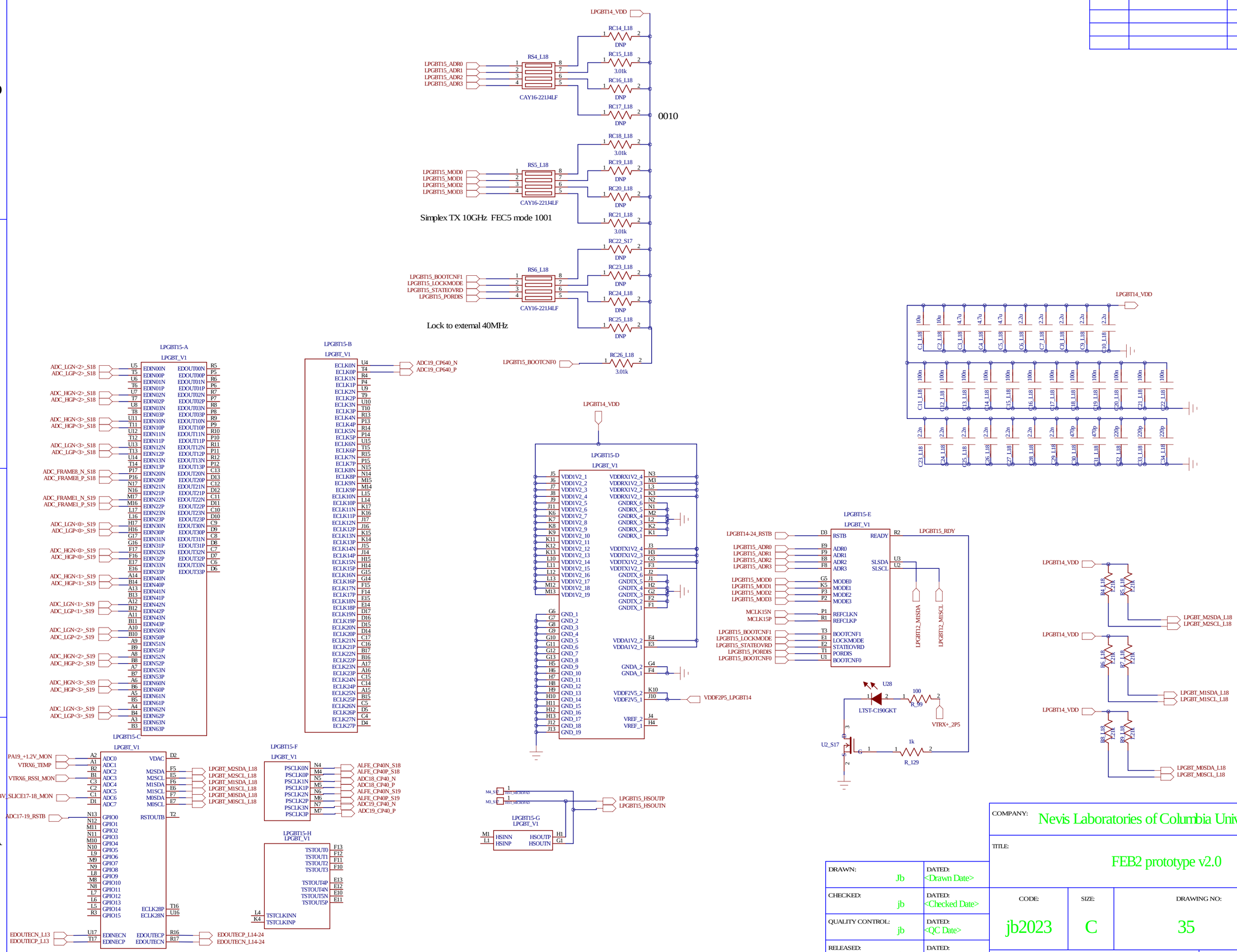

DRAWN: Jb	DATED: <Drawn Date>	COMPANY: Nevis Laboratories of Columbia University	
CHECKED: jb	DATED: <Checked Date>	TITLE: FEB2 prototype v2.0	
QUALITY CONTROL: jb	DATED: <QC Date>	CODE: jb2023 / SIZE: C / DRAWING NO: 35	REV: v2.0
RELEASED: jb	DATED: <Release Date>	SCALE: <Scale>	SHEET: 80 155

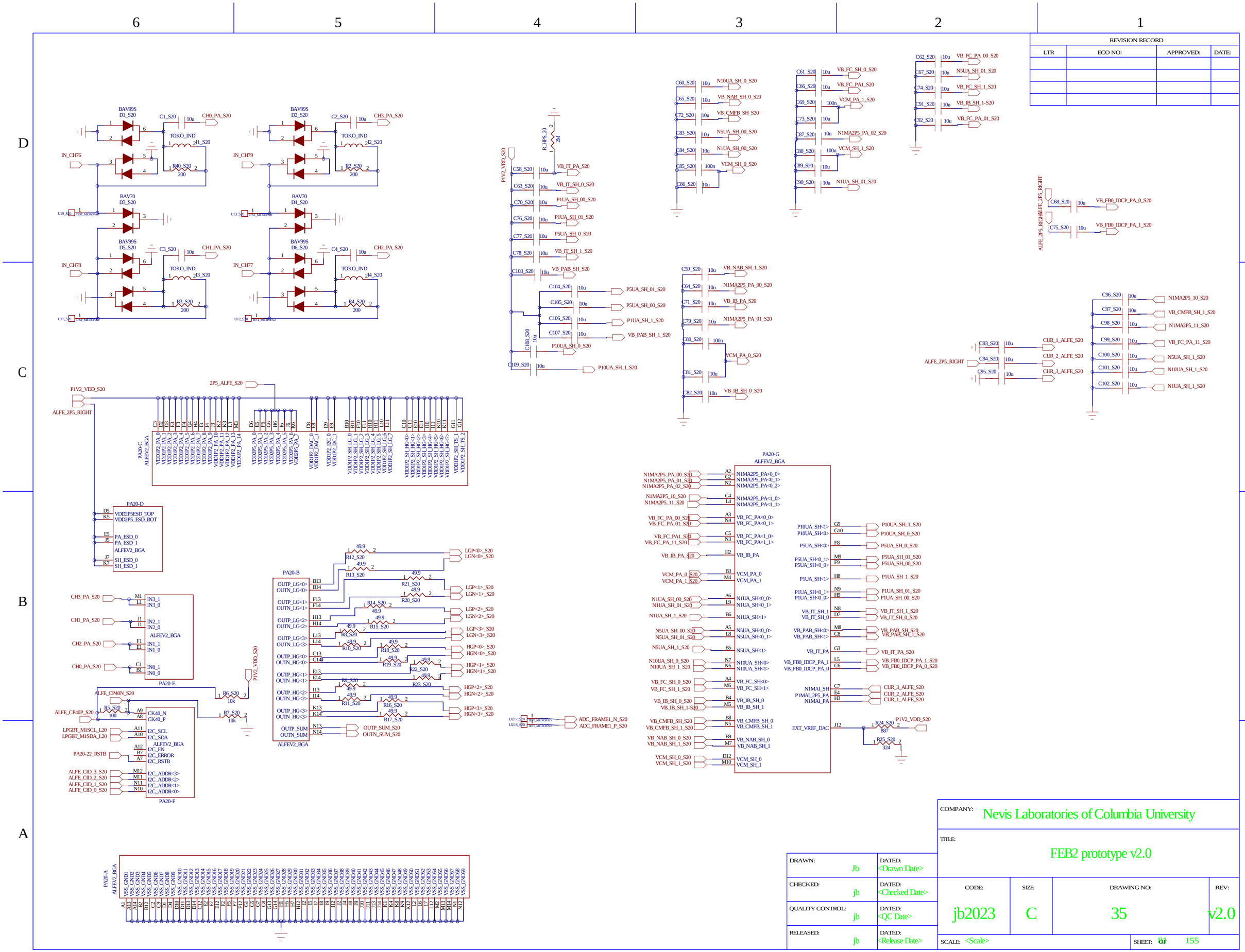

REVISION RECORD			
LTR	ECO NO:	APPROVED:	DATE:

DRAWN: Jb	DATED: <Drawn Date>	COMPANY: Nevis Laboratories of Columbia University	
CHECKED: jb	DATED: <Checked Date>	TITLE: FEB2 prototype v2.0	
QUALITY CONTROL: jb	DATED: <QC Date>	CODE: jb2023 / SIZE: C / DRAWING NO: 35	REV: v2.0
RELEASED: jb	DATED: <Release Date>	SCALE: <Scale>	SHEET: 81 OF 155

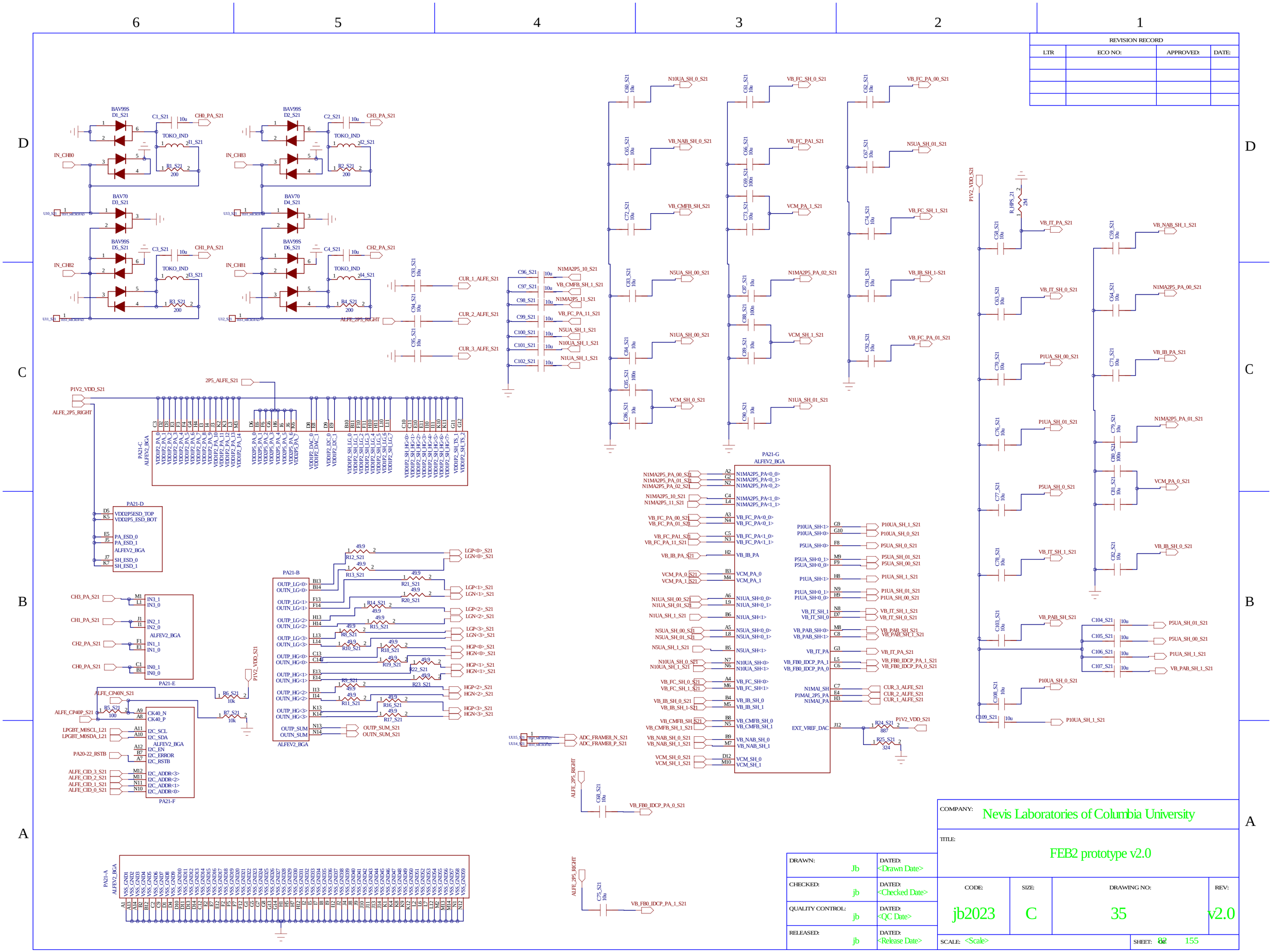

REVISION RECORD			
LTR	ECO NO:	APPROVED:	DATE:

COMPANY: Nevis Laboratories of Columbia University

TITLE: FEB2 prototype v2.0

DRAWN: Jb	DATED: <Drawn Date>		
CHECKED: jb	DATED: <Checked Date>		
QUALITY CONTROL: jb	DATED: <QC Date>		
RELEASED: jb	DATED: <Release Date>		

CODE:	SIZE:	DRAWING NO:	REV:
jb2023	C	35	v2.0

SCALE: <Scale> SHEET: 82 OF 155

REVISION RECORD			
LTR	ECO NO:	APPROVED:	DATE:

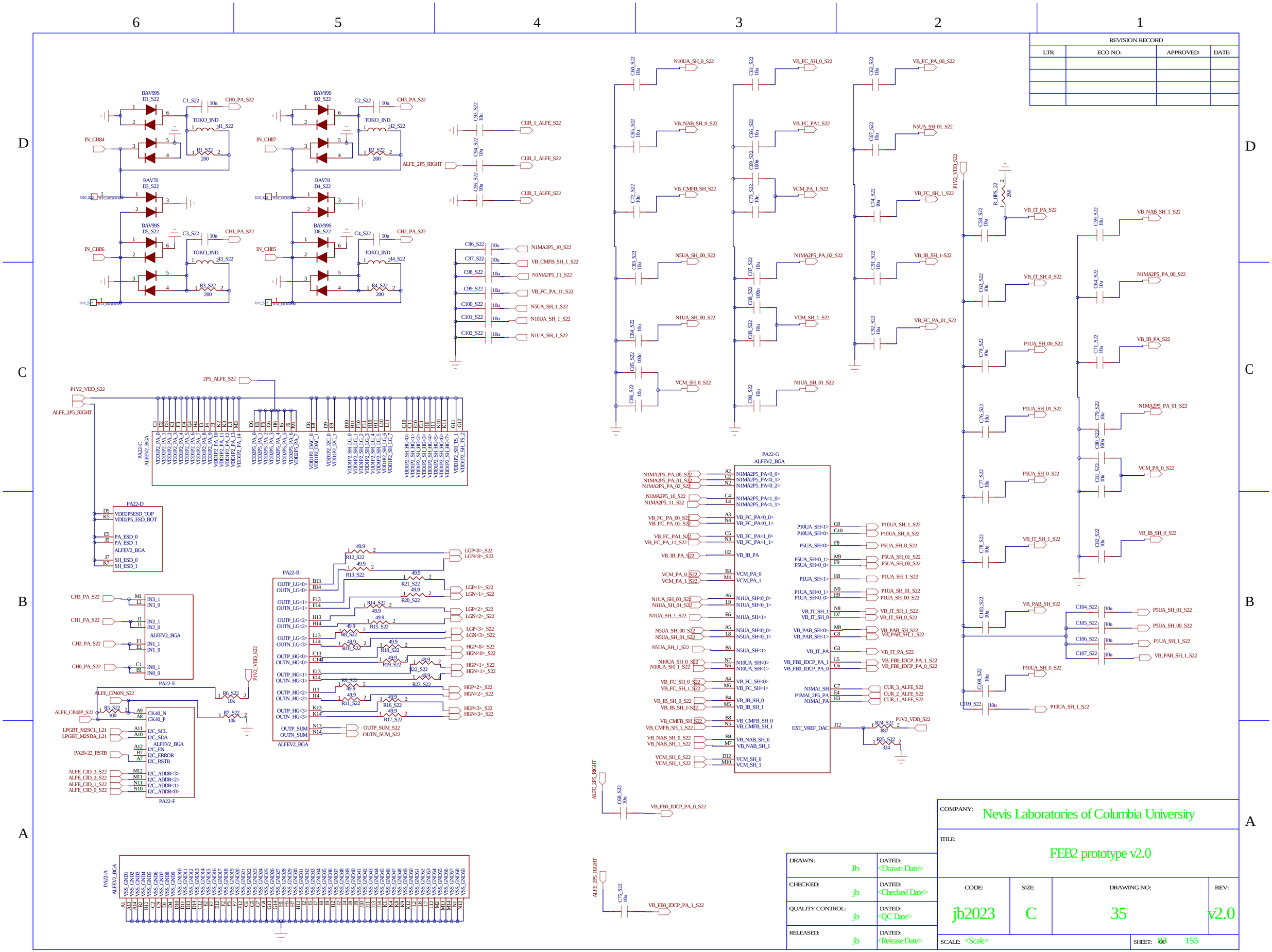

DRAWN: Jb	DATED: <Drawn Date>	COMPANY: Nevis Laboratories of Columbia University	
CHECKED: jb	DATED: <Checked Date>	TITLE: FEB2 prototype v2.0	
QUALITY CONTROL: jb	DATED: <QC Date>	CODE: jb2023	SIZE: C
RELEASED: jb	DATED: <Release Date>	DRAWING NO: 35	REV: v2.0
		SCALE: <Scale>	SHEET: 83 OF 155

REVISION RECORD			
LTR	ECO NO:	APPROVED:	DATE:

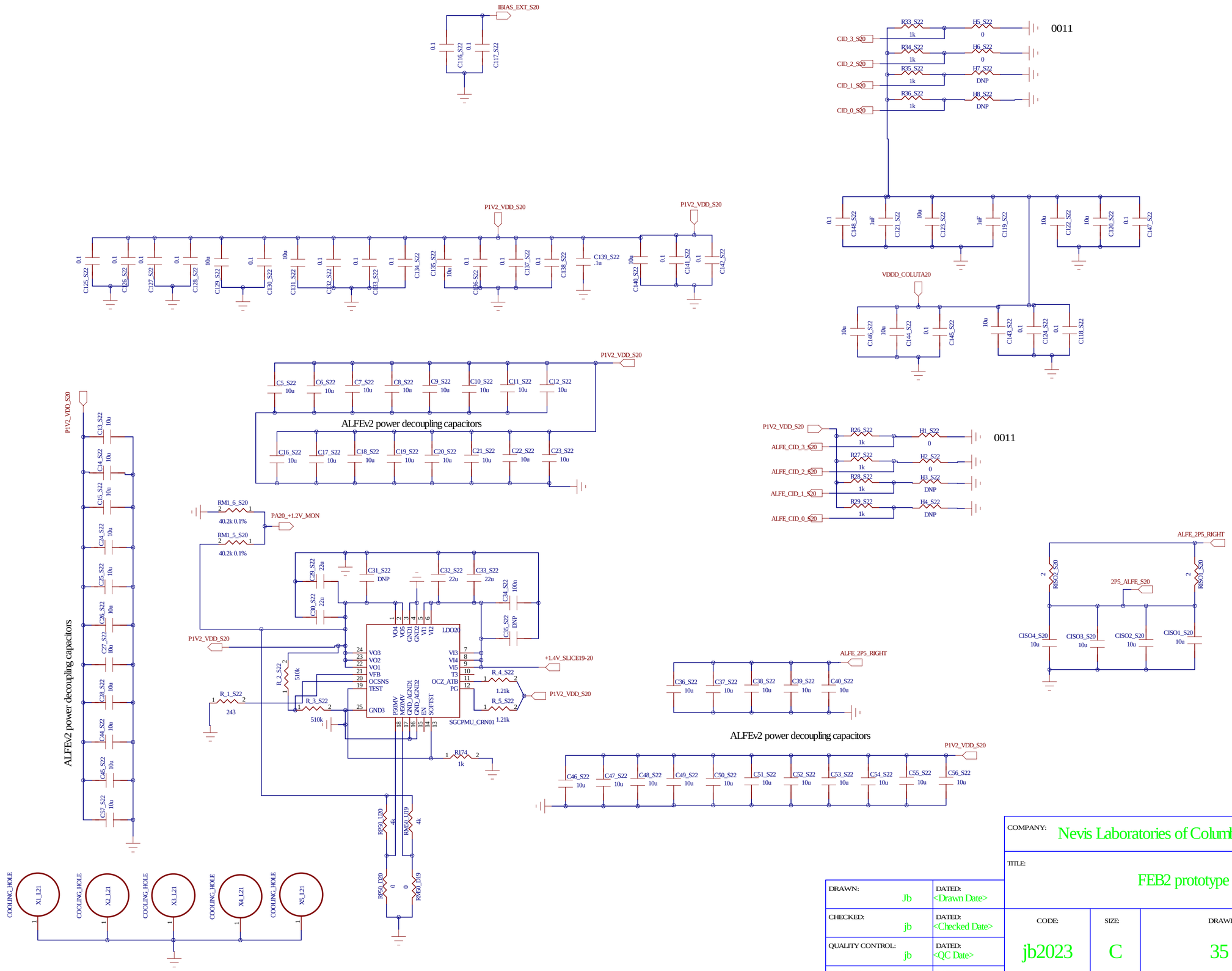

DRAWN: Jb	DATED: <Drawn Date>	COMPANY: Nevis Laboratories of Columbia University	
CHECKED: jb	DATED: <Checked Date>	TITLE: FEB2 prototype v2.0	
QUALITY CONTROL: jb	DATED: <QC Date>	CODE: jb2023	SIZE: C
RELEASED: jb	DATED: <Release Date>	DRAWING NO: 35	REV: v2.0
		SCALE: <Scale>	SHEET: 84 OF 155

REVISION RECORD			
LTR	ECO NO:	APPROVED:	DATE:

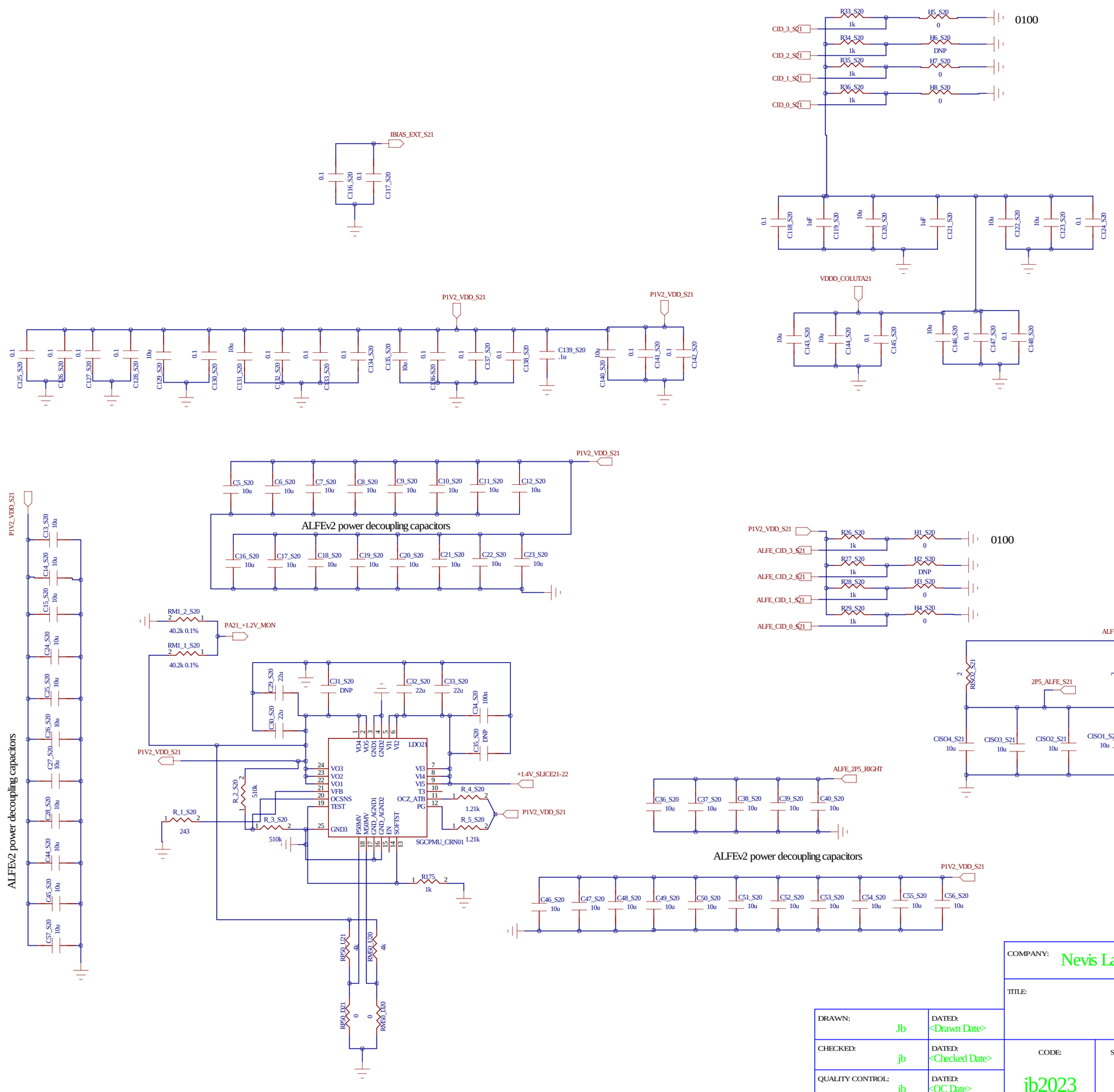

DRAWN: Jb	DATED: <Drawn Date>	COMPANY: Nevis Laboratories of Columbia University			
CHECKED: jb	DATED: <Checked Date>	TITLE: FEB2 prototype v2.0			
QUALITY CONTROL: jb	DATED: <QC Date>	CODE: jb2023	SIZE: C	DRAWING NO: 35	REV: v2.0
RELEASED: jb	DATED: <Release Date>	SCALE: <Scale>		SHEET: 85 OF 155	

REVISION RECORD			
LTR	ECO NO:	APPROVED:	DATE:

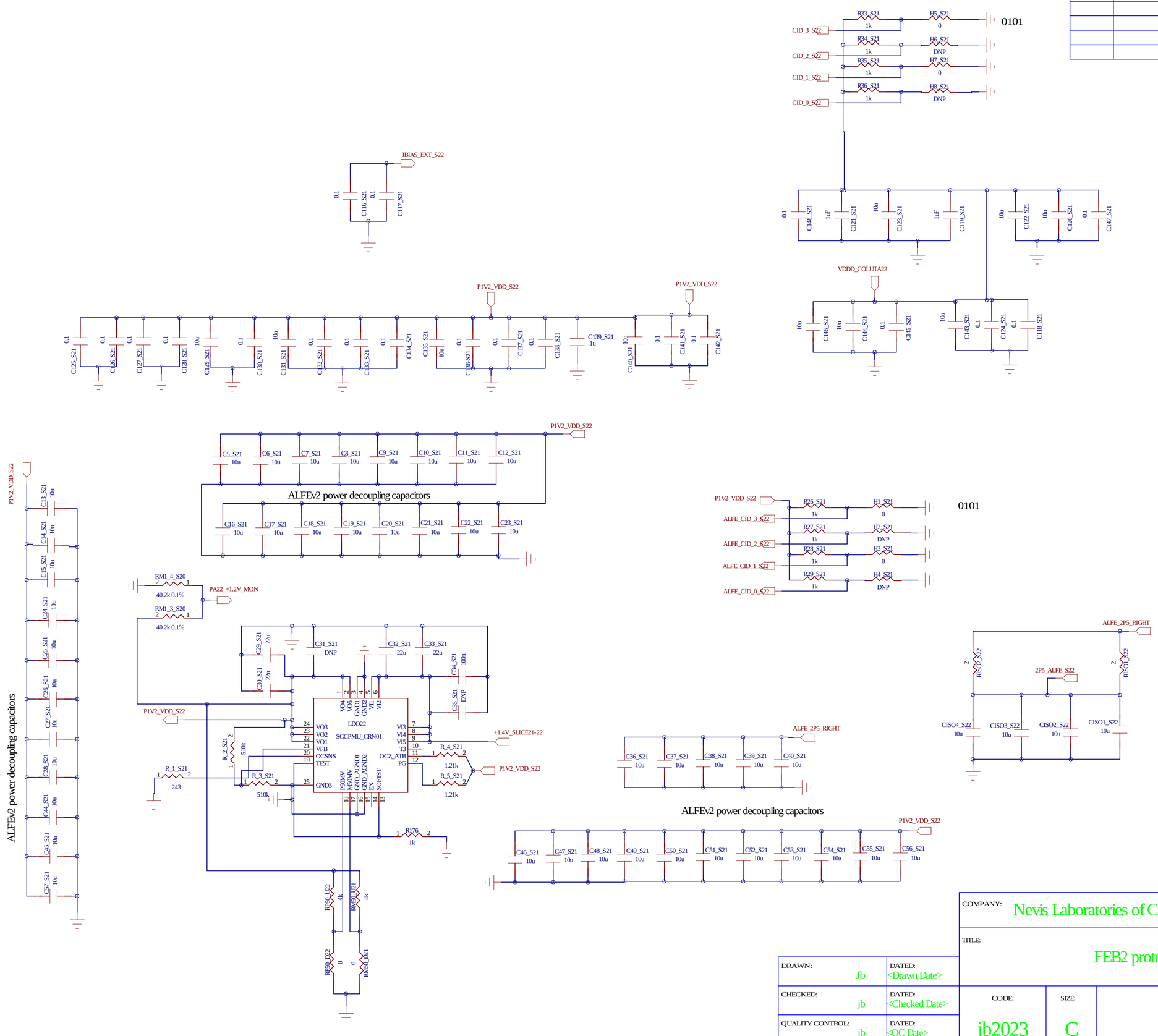

DRAWN: Jb	DATED: <Drawn Date>	COMPANY: Nevis Laboratories of Columbia University	
CHECKED: jb	DATED: <Checked Date>	TITLE: FEB2 prototype v2.0	
QUALITY CONTROL: jb	DATED: <QC Date>	CODE: jb2023	SIZE: C
RELEASED: jb	DATED: <Release Date>	DRAWING NO: 35	REV: v2.0
		SCALE: <Scale>	SHEET: 86 155

REVISION RECORD			
LTR	ECO NO:	APPROVED:	DATE:

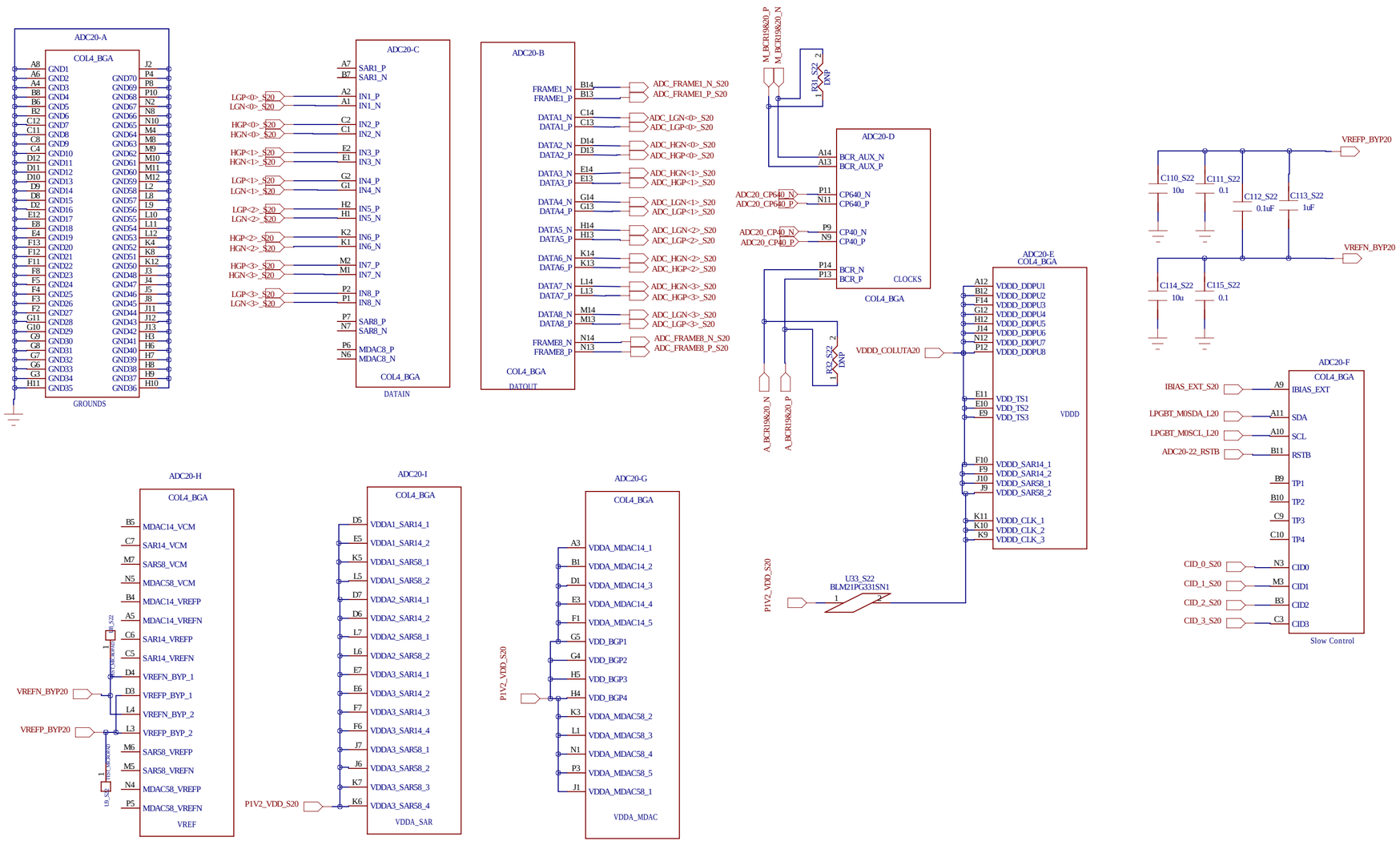

DRAWN: Jb	DATED: <Drawn Date>	COMPANY: Nevis Laboratories of Columbia University			
CHECKED: jb	DATED: <Checked Date>	TITLE: FEB2 prototype v2.0			
QUALITY CONTROL: jb	DATED: <QC Date>	CODE: jb2023	SIZE: C	DRAWING NO: 35	REV: v2.0
RELEASED: jb	DATED: <Release Date>	SCALE: <Scale>		SHEET: 87 OF 155	

REVISION RECORD			
LTR	ECO NO:	APPROVED:	DATE:

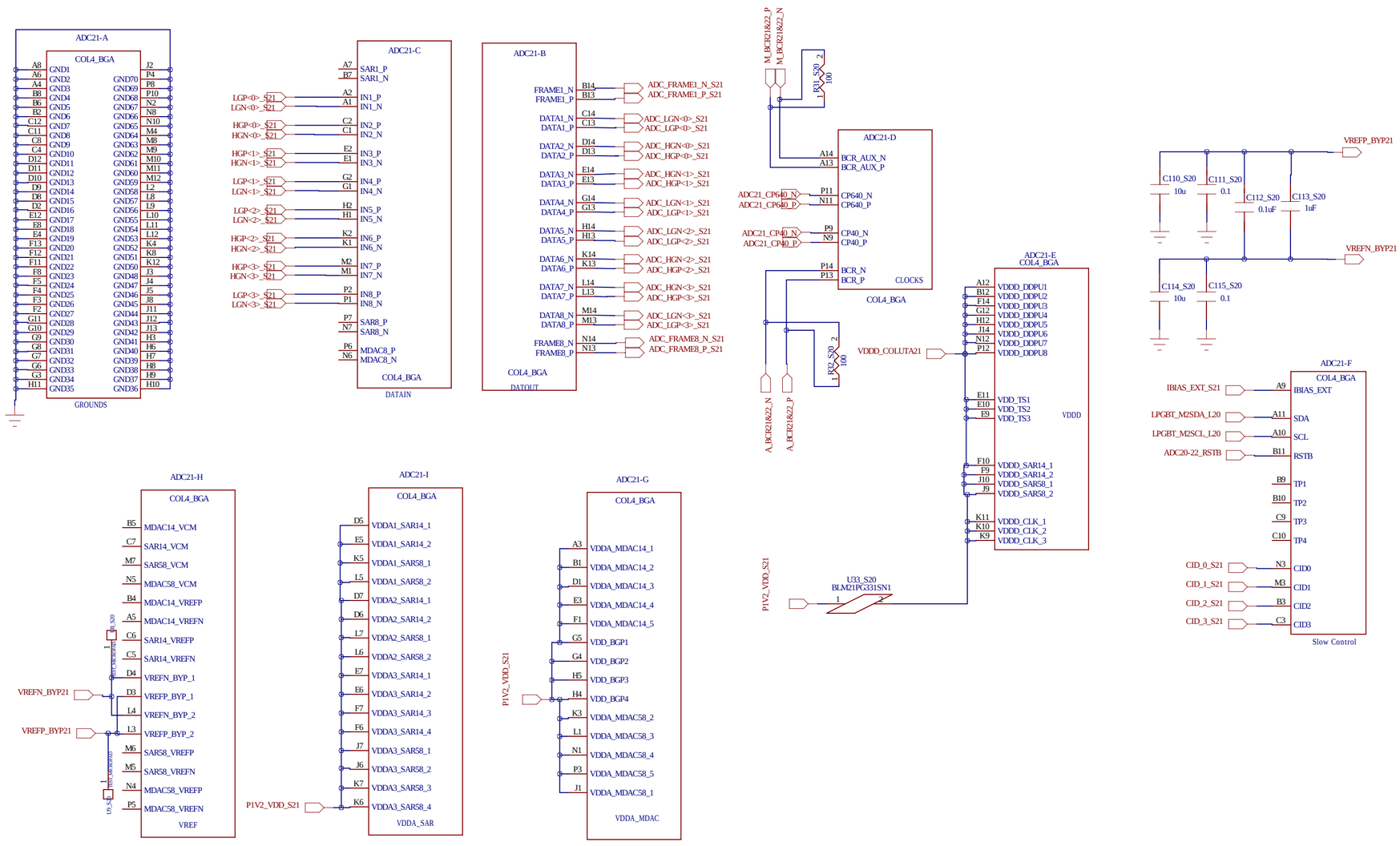

COMPANY: Nevis Laboratories of Columbia University				
TITLE: FEB2 prototype v2.0				
DRAWN: Jb	DATED: <Drawn Date>	CODE: jb2023	SIZE: C	DRAWING NO: 35 / REV: v2.0
CHECKED: jb	DATED: <Checked Date>			
QUALITY CONTROL: jb	DATED: <QC Date>			
RELEASED: jb	DATED: <Release Date>	SCALE: <Scale>	SHEET: 88 OF 155	

REVISION RECORD			
LTR	ECO NO:	APPROVED:	DATE:

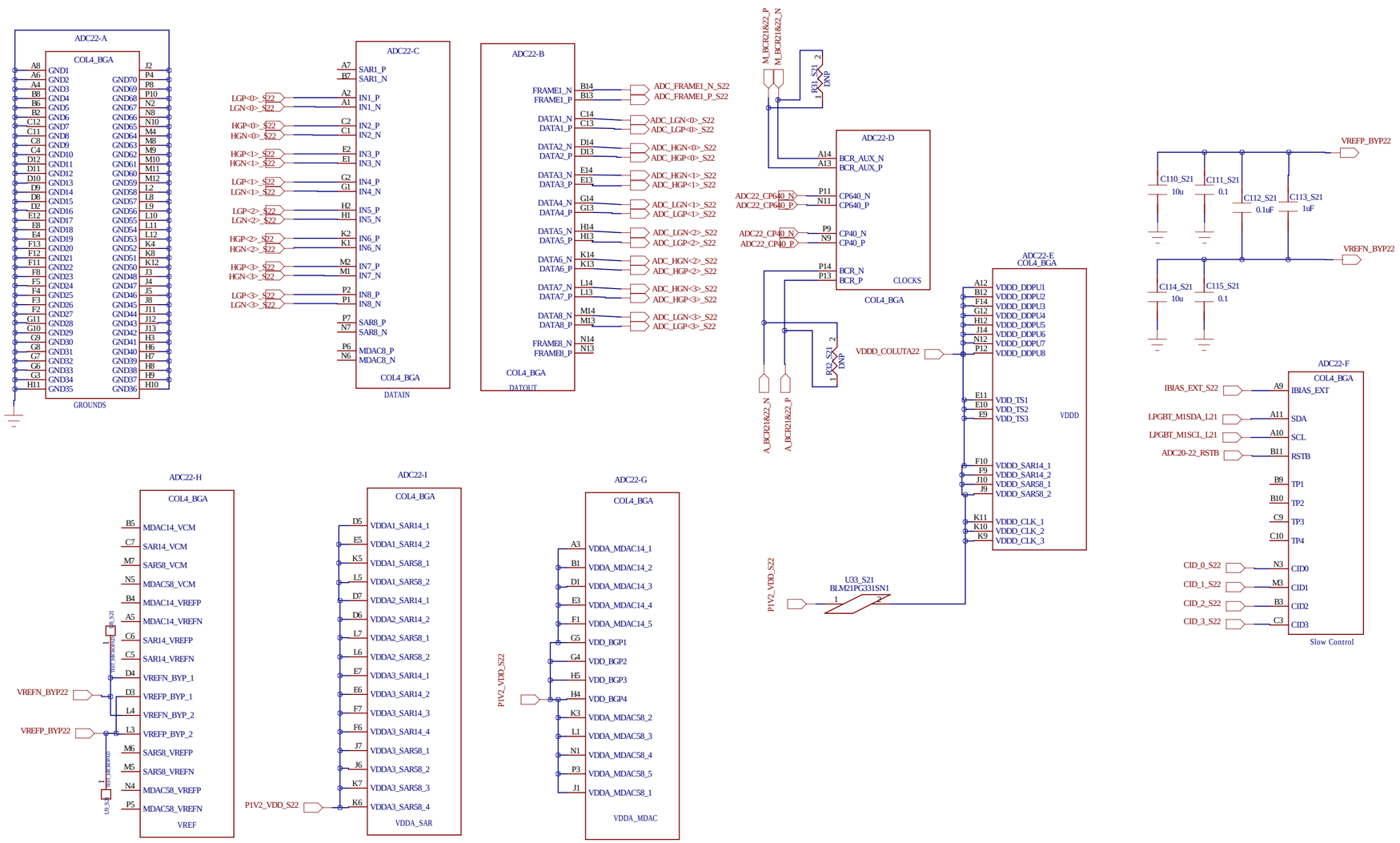

COMPANY: Nevis Laboratories of Columbia University					
TITLE: FEB2 prototype v2.0					
DRAWN: Jb	DATED: <Drawn Date>	CODE: jb2023	SIZE: C	DRAWING NO: 35	REV: v2.0
CHECKED: jb	DATED: <Checked Date>				
QUALITY CONTROL: jb	DATED: <QC Date>				
RELEASED: jb	DATED: <Release Date>	SCALE: <Scale>		SHEET: 80 OF 155	

REVISION RECORD			
LTR	ECO NO:	APPROVED:	DATE:

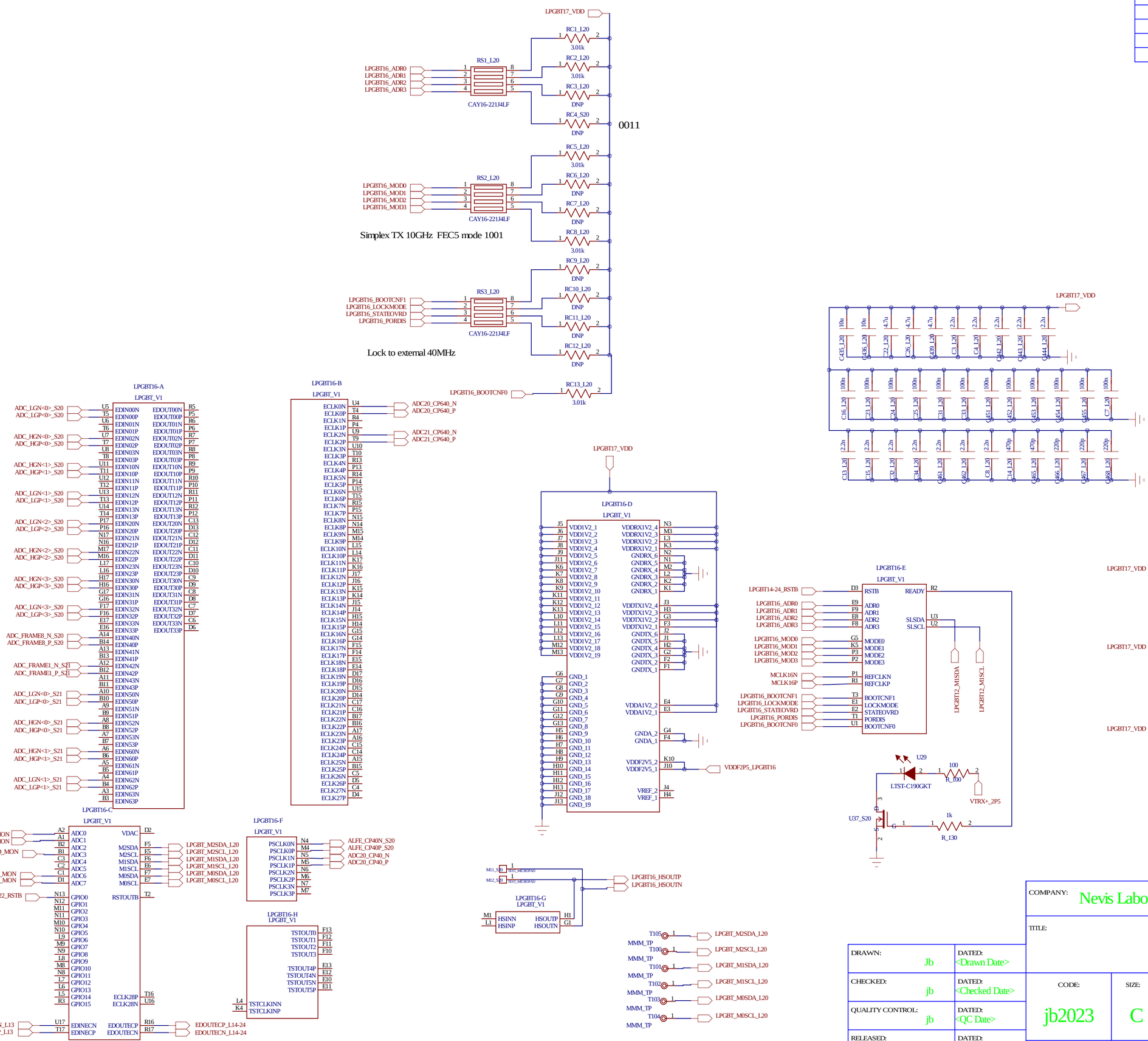

COMPANY:	Nevis Laboratories of Columbia University		
TITLE:	FEB2 prototype v2.0		
DRAWN: Jb	DATED: <Drawn Date>		
CHECKED: jb	DATED: <Checked Date>		
QUALITY CONTROL: jb	DATED: <QC Date>		
RELEASED: jb	DATED: <Release Date>		
CODE: jb2023	SIZE: C	DRAWING NO: 35	REV: v2.0
SCALE: <Scale>	SHEET: 20	155	

REVISION RECORD			
LTR	ECO NO:	APPROVED:	DATE:

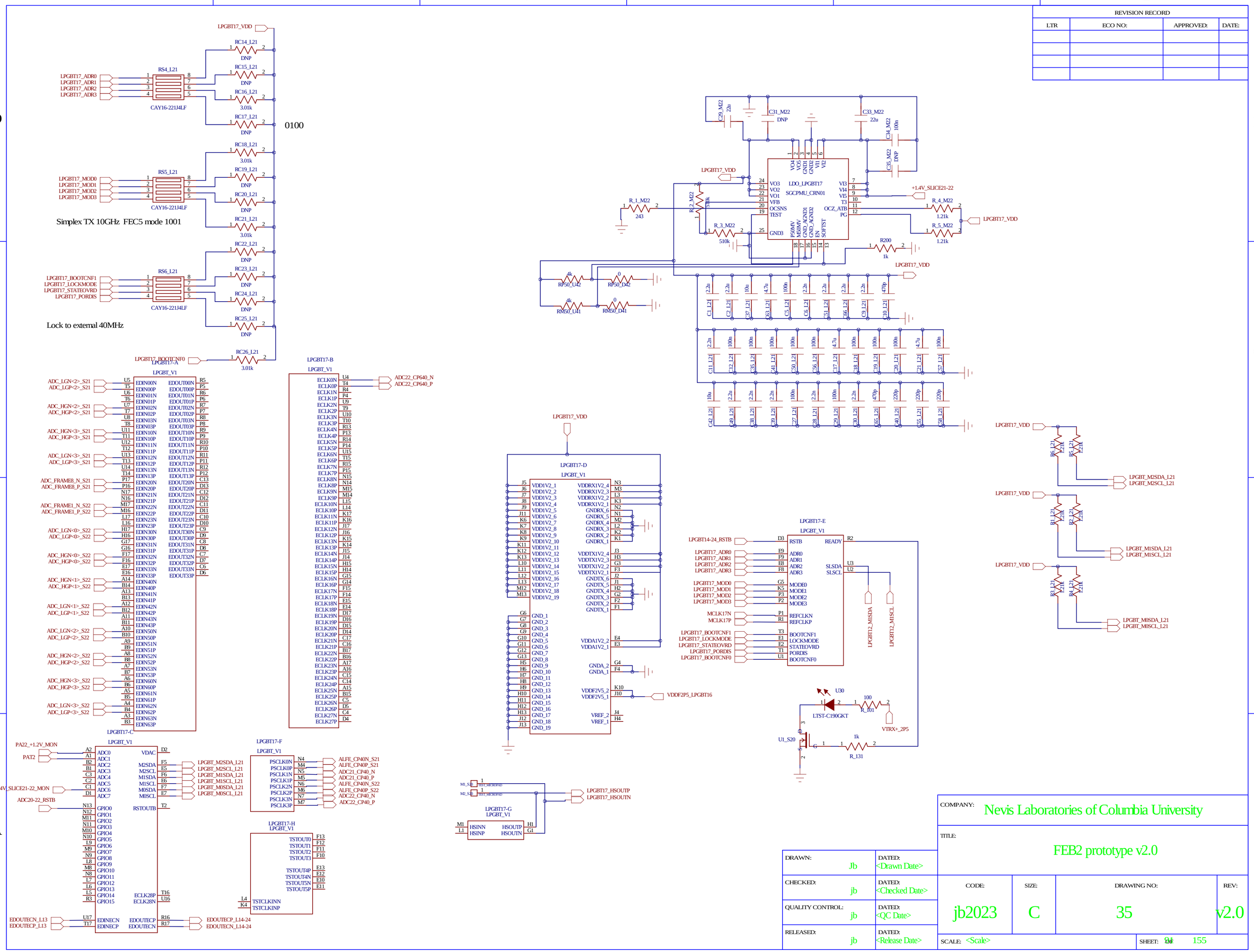

COMPANY:	Nevis Laboratories of Columbia University		
TITLE:	FEB2 prototype v2.0		
DRAWN: Jb	DATED: <Drawn Date>		
CHECKED: jb	DATED: <Checked Date>		
QUALITY CONTROL: jb	DATED: <QC Date>		
RELEASED: jb	DATED: <Release Date>		

CODE:	SIZE:	DRAWING NO:	REV:
jb2023	C	35	v2.0

SCALE: <Scale> SHEET: 94 OF 155

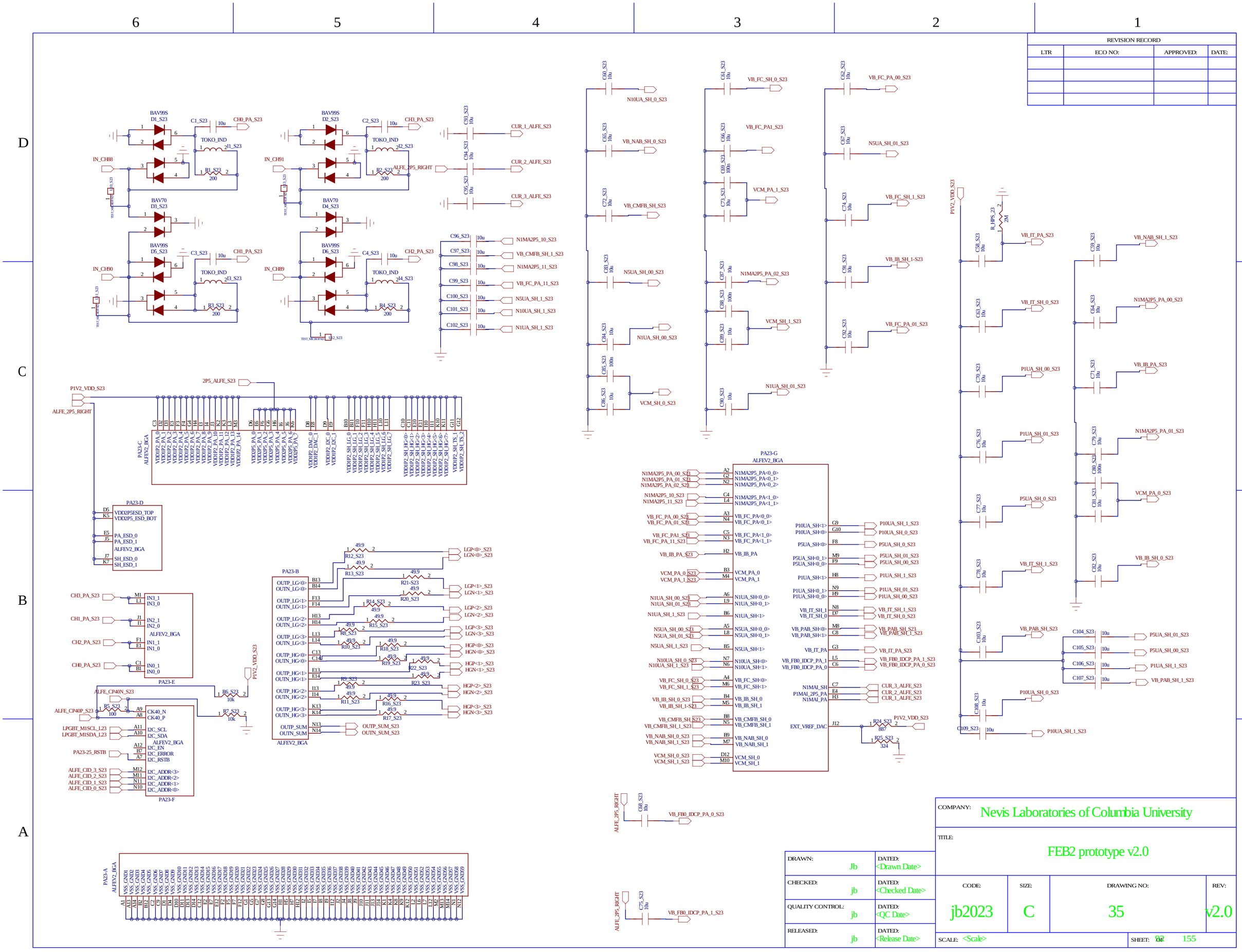
REVISION RECORD
LTR
ECO NO:
APPROVED:
DATE:
BAV99S
BAV70
TOKO_IND
IN_CH88
IN_CH91
IN_CH90
IN_CH89
CH0_PA_S23
CH1_PA_S23
CH2_PA_S23
CH3_PA_S23
CUR_1_ALFE_S23
CUR_2_ALFE_S23
CUR_3_ALFE_S23
ALFE_2P5_RIGHT
N1MA2P5_10_S23
VB_CMFB_SH_1_S23
N1MA2P5_11_S23
VB_FC_PA_11_S23
N5UA_SH_1_S23
N10UA_SH_1_S23
N1UA_SH_1_S23
N10UA_SH_0_S23
VB_NAB_SH_0_S23
VB_CMFB_SH_S23
N5UA_SH_00_S23
N1UA_SH_00_S23
VCM_SH_0_S23
VB_FC_SH_0_S23
VB_FC_PA1_S23
VCM_PA_1_S23
N1MA2P5_PA_02_S23
VCM_SH_1_S23
N1UA_SH_01_S23
VB_FC_PA_00_S23
N5UA_SH_01_S23
VB_FC_SH_1_S23
VB_IB_SH_1-S23
VB_FC_PA_01_S23
P1V2_VDD_S23
VB_IT_PA_S23
VB_IT_SH_0_S23
P1UA_SH_00_S23
P1UA_SH_01_S23
P5UA_SH_0_S23
VB_IT_SH_1_S23
VB_PAB_SH_S23
P10UA_SH_0_S23
P10UA_SH_1_S23
VB_NAB_SH_1_S23
N1MA2P5_PA_00_S23
VB_IB_PA_S23
N1MA2P5_PA_01_S23
VCM_PA_0_S23
VB_IB_SH_0_S23
P5UA_SH_01_S23
P5UA_SH_00_S23
P1UA_SH_1_S23
VB_PAB_SH_1_S23
PA23-C
ALFEV2_BGA
PA23-D
PA23-E
PA23-F
PA23-G
PA23-B
PA23-A
VB_FB0_IDCP_PA_0_S23
VB_FB0_IDCP_PA_1_S23
COMPANY:
Nevis Laboratories of Columbia University
TITLE:
FEB2 prototype v2.0
DRAWN:
Jb
DATED:
<Drawn Date>
CHECKED:
jb
DATED:
<Checked Date>
QUALITY CONTROL:
jb
DATED:
<QC Date>
RELEASED:
jb
DATED:
<Release Date>
CODE:
jb2023
SIZE:
C
DRAWING NO:
35
REV:
v2.0
SCALE:
<Scale>
SHEET:
92
155

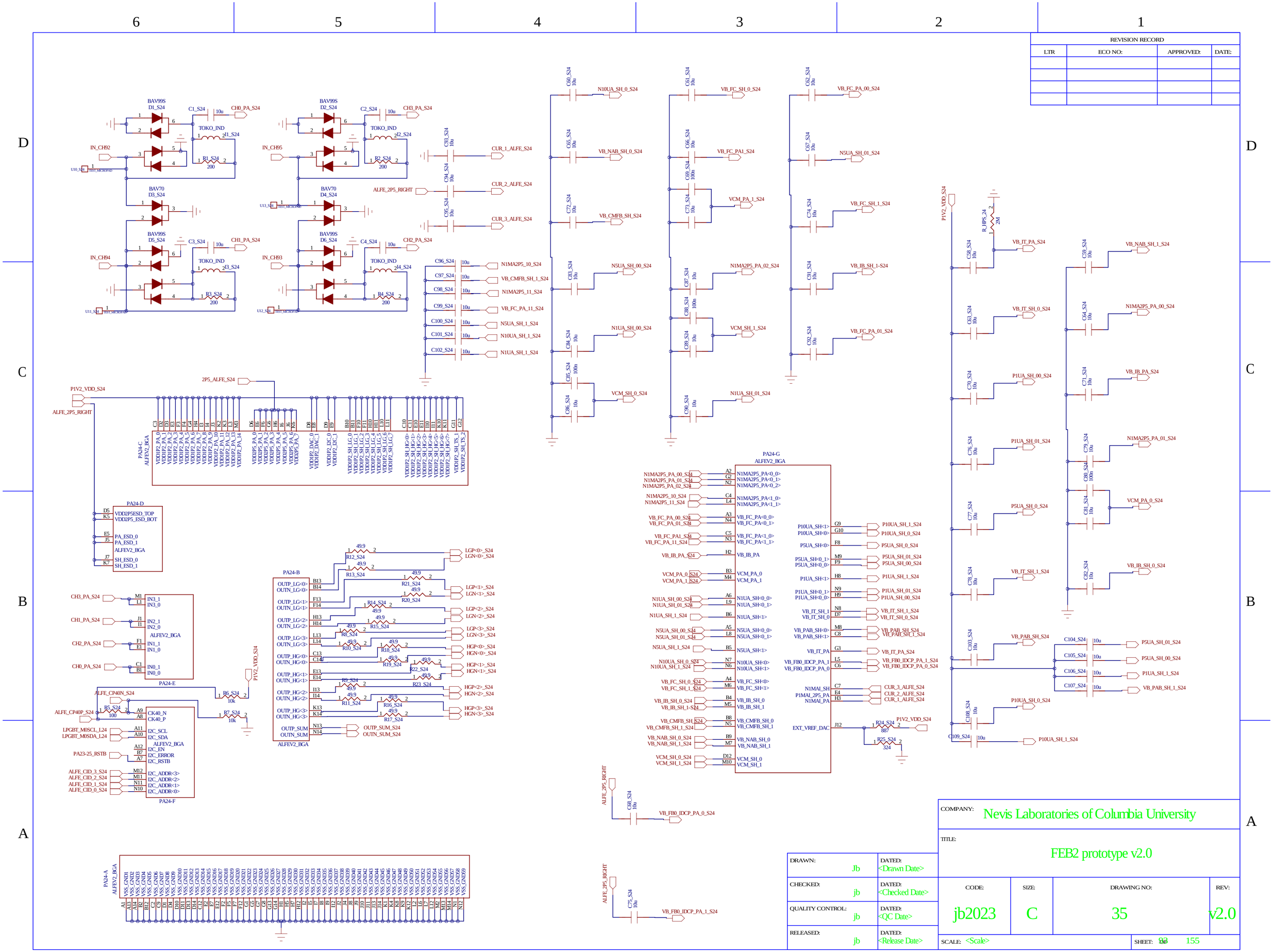
6
5
4
3
2
1
D
C
B
A
REVISION RECORD
LTR
ECO NO:
APPROVED:
DATE:
BAV99S
D1_S24
C1_S24
10u
CH0_PA_S24
TOKO_IND
I1_S24
IN_CH92
R1_S24
200
BAV70
D3_S24
BAV99S
D5_S24
C3_S24
CH1_PA_S24
IN_CH94
I3_S24
R3_S24
BAV99S
D2_S24
C2_S24
CH3_PA_S24
IN_CH95
I2_S24
R2_S24
BAV70
D4_S24
BAV99S
D6_S24
C4_S24
CH2_PA_S24
IN_CH93
I4_S24
R4_S24
C93_S24
CUR_1_ALFE_S24
C94_S24
ALFE_2P5_RIGHT
CUR_2_ALFE_S24
C95_S24
CUR_3_ALFE_S24
C96_S24
N1MA2P5_10_S24
C97_S24
VB_CMFB_SH_1_S24
C98_S24
N1MA2P5_11_S24
C99_S24
VB_FC_PA_11_S24
C100_S24
N5UA_SH_1_S24
C101_S24
N10UA_SH_1_S24
C102_S24
N1UA_SH_1_S24
C60_S24
N10UA_SH_0_S24
C65_S24
VB_NAB_SH_0_S24
C72_S24
VB_CMFB_SH_S24
C83_S24
N5UA_SH_00_S24
C84_S24
N1UA_SH_00_S24
C85_S24
C86_S24
VCM_SH_0_S24
C61_S24
VB_FC_SH_0_S24
C66_S24
VB_FC_PA1_S24
C69_S24
C73_S24
VCM_PA_1_S24
C87_S24
N1MA2P5_PA_02_S24
C88_S24
C89_S24
VCM_SH_1_S24
C90_S24
N1UA_SH_01_S24
C62_S24
VB_FC_PA_00_S24
C67_S24
N5UA_SH_01_S24
C74_S24
VB_FC_SH_1_S24
C91_S24
VB_IB_SH_1-S24
C92_S24
VB_FC_PA_01_S24
P1V2_VDD_S24
R_HP5_24
2M
C58_S24
VB_IT_PA_S24
C63_S24
VB_IT_SH_0_S24
C70_S24
P1UA_SH_00_S24
C76_S24
P1UA_SH_01_S24
C77_S24
P5UA_SH_0_S24
C78_S24
VB_IT_SH_1_S24
C103_S24
VB_PAB_SH_S24
C108_S24
P10UA_SH_0_S24
C109_S24
P10UA_SH_1_S24
C59_S24
VB_NAB_SH_1_S24
C64_S24
N1MA2P5_PA_00_S24
C71_S24
VB_IB_PA_S24
C79_S24
N1MA2P5_PA_01_S24
C80_S24
C81_S24
VCM_PA_0_S24
C82_S24
VB_IB_SH_0_S24
C104_S24
P5UA_SH_01_S24
C105_S24
P5UA_SH_00_S24
C106_S24
P1UA_SH_1_S24
C107_S24
VB_PAB_SH_1_S24
2P5_ALFE_S24
P1V2_VDD_S24
ALFE_2P5_RIGHT
PA24-C
ALFEV2_BGA
PA24-D
VDD2P5ESD_TOP
VDD2P5_ESD_BOT
PA_ESD_0
PA_ESD_1
ALFEV2_BGA
SH_ESD_0
SH_ESD_1
PA24-B
ALFEV2_BGA
OUTP_LG<0>
OUTN_LG<0>
OUTP_LG<1>
OUTN_LG<1>
OUTP_LG<2>
OUTN_LG<2>
OUTP_LG<3>
OUTN_LG<3>
OUTP_HG<0>
OUTN_HG<0>
OUTP_HG<1>
OUTN_HG<1>
OUTP_HG<2>
OUTN_HG<2>
OUTP_HG<3>
OUTN_HG<3>
OUTP_SUM
OUTN_SUM
R12_S24
R13_S24
R21_S24
R20_S24
R14_S24
R15_S24
R8_S24
R10_S24
R18_S24
R19_S24
R22_S24
R23_S24
R9_S24
R11_S24
R16_S24
R17_S24
LGP<0>_S24
LGN<0>_S24
LGP<1>_S24
LGN<1>_S24
LGP<2>_S24
LGN<2>_S24
LGP<3>_S24
LGN<3>_S24
HGP<0>_S24
HGN<0>_S24
HGP<1>_S24
HGN<1>_S24
HGP<2>_S24
HGN<2>_S24
HGP<3>_S24
HGN<3>_S24
OUTP_SUM_S24
OUTN_SUM_S24
CH3_PA_S24
CH1_PA_S24
CH2_PA_S24
CH0_PA_S24
IN3_1
IN3_0
IN2_1
IN2_0
IN1_1
IN1_0
IN0_1
IN0_0
ALFEV2_BGA
PA24-E
P1V2_VDD_S24
R6_S24
10k
ALFE_CP40N_S24
ALFE_CP40P_S24
R5_S24
100
R7_S24
10k
CK40_N
CK40_P
LPGBT_M0SCL_1_24
LPGBT_M0SDA_1_24
I2C_SCL
I2C_SDA
ALFEV2_BGA
PA23-25_RSTB
I2C_EN
I2C_ERROR
I2C_RSTB
ALFE_CID_3_S24
ALFE_CID_2_S24
ALFE_CID_1_S24
ALFE_CID_0_S24
I2C_ADDR<3>
I2C_ADDR<2>
I2C_ADDR<1>
I2C_ADDR<0>
PA24-F
PA24-A
ALFEV2_BGA
PA24-G
ALFEV2_BGA
N1MA2P5_PA_00_S24
N1MA2P5_PA_01_S24
N1MA2P5_PA_02_S24
N1MA2P5_PA<0_0>
N1MA2P5_PA<0_1>
N1MA2P5_PA<0_2>
N1MA2P5_10_S24
N1MA2P5_11_S24
N1MA2P5_PA<1_0>
N1MA2P5_PA<1_1>
VB_FC_PA_00_S24
VB_FC_PA_01_S24
VB_FC_PA<0_0>
VB_FC_PA<0_1>
VB_FC_PA1_S24
VB_FC_PA_11_S24
VB_FC_PA<1_0>
VB_FC_PA<1_1>
VB_IB_PA_S24
VB_IB_PA
VCM_PA_0_S24
VCM_PA_1_S24
VCM_PA_0
VCM_PA_1
N1UA_SH_00_S24
N1UA_SH_01_S24
N1UA_SH<0_0>
N1UA_SH<0_1>
N1UA_SH_1_S24
N1UA_SH<1>
N5UA_SH_00_S24
N5UA_SH_01_S24
N5UA_SH<0_0>
N5UA_SH<0_1>
N5UA_SH_1_S24
N5UA_SH<1>
N10UA_SH_0_S24
N10UA_SH_1_S24
N10UA_SH<0>
N10UA_SH<1>
VB_FC_SH_0_S24
VB_FC_SH_1_S24
VB_FC_SH<0>
VB_FC_SH<1>
VB_IB_SH_0_S24
VB_IB_SH_1-S24
VB_IB_SH_0
VB_IB_SH_1
VB_CMFB_SH_S24
VB_CMFB_SH_1_S24
VB_CMFB_SH_0
VB_CMFB_SH_1
VB_NAB_SH_0_S24
VB_NAB_SH_1_S24
VB_NAB_SH_0
VB_NAB_SH_1
VCM_SH_0_S24
VCM_SH_1_S24
VCM_SH_0
VCM_SH_1
P10UA_SH<1>
P10UA_SH<0>
P10UA_SH_1_S24
P10UA_SH_0_S24
P5UA_SH<0>
P5UA_SH_0_S24
P5UA_SH<0_1>
P5UA_SH<0_0>
P5UA_SH_01_S24
P5UA_SH_00_S24
P1UA_SH<1>
P1UA_SH_1_S24
P1UA_SH<0_1>
P1UA_SH<0_0>
P1UA_SH_01_S24
P1UA_SH_00_S24
VB_IT_SH_1
VB_IT_SH_0
VB_IT_SH_1_S24
VB_IT_SH_0_S24
VB_PAB_SH<0>
VB_PAB_SH<1>
VB_PAB_SH_S24
VB_PAB_SH_1_S24
VB_IT_PA
VB_IT_PA_S24
VB_FB0_IDCP_PA_1
VB_FB0_IDCP_PA_0
VB_FB0_IDCP_PA_1_S24
VB_FB0_IDCP_PA_0_S24
N1MAI_SH
P1MAI_2P5_PA
N1MAI_PA
CUR_3_ALFE_S24
CUR_2_ALFE_S24
CUR_1_ALFE_S24
EXT_VREF_DAC
J12
R24_S24
887
P1V2_VDD_S24
R25_S24
324
ALFE_2P5_RIGHT
C68_S24
10u
VB_FB0_IDCP_PA_0_S24
ALFE_2P5_RIGHT
C75_S24
10u
VB_FB0_IDCP_PA_1_S24
COMPANY:
Nevis Laboratories of Columbia University
TITLE:
FEB2 prototype v2.0
DRAWN:
Jb
DATED:
<Drawn Date>
CHECKED:
jb
DATED:
<Checked Date>
QUALITY CONTROL:
jb
DATED:
<QC Date>
RELEASED:
jb
DATED:
<Release Date>
CODE:
jb2023
SIZE:
C
DRAWING NO:
35
REV:
v2.0
SCALE:
<Scale>
SHEET:
93
155

REVISION RECORD			
LTR	ECO NO:	APPROVED:	DATE:

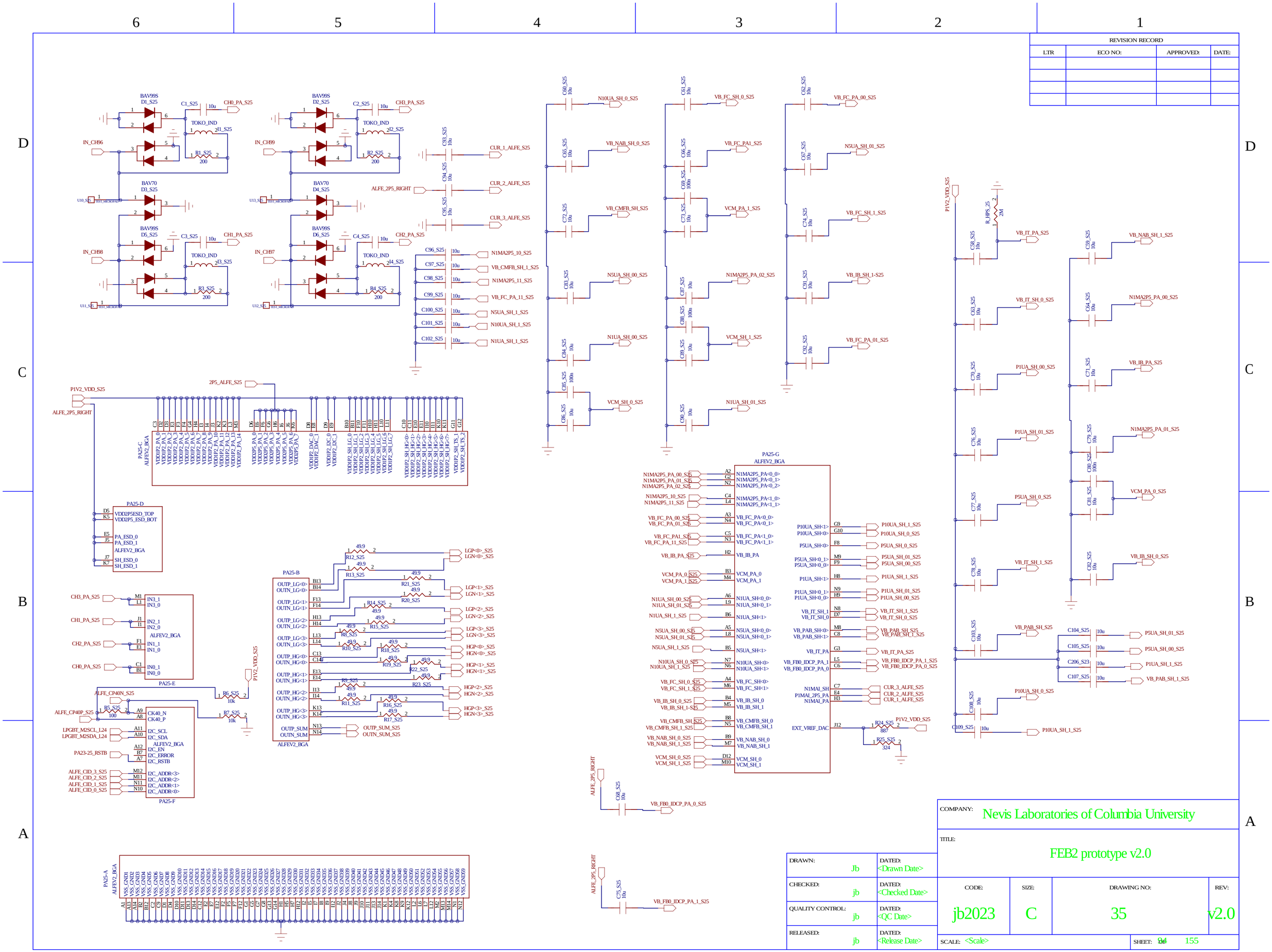

DRAWN: Jb	DATED: <Drawn Date>	COMPANY: Nevis Laboratories of Columbia University	
CHECKED: jb	DATED: <Checked Date>	TITLE: FEB2 prototype v2.0	
QUALITY CONTROL: jb	DATED: <QC Date>	CODE: jb2023	SIZE: C
RELEASED: jb	DATED: <Release Date>	DRAWING NO: 35	REV: v2.0
		SCALE: <Scale>	SHEET: 94 of 155

REVISION RECORD			
LTR	ECO NO:	APPROVED:	DATE:

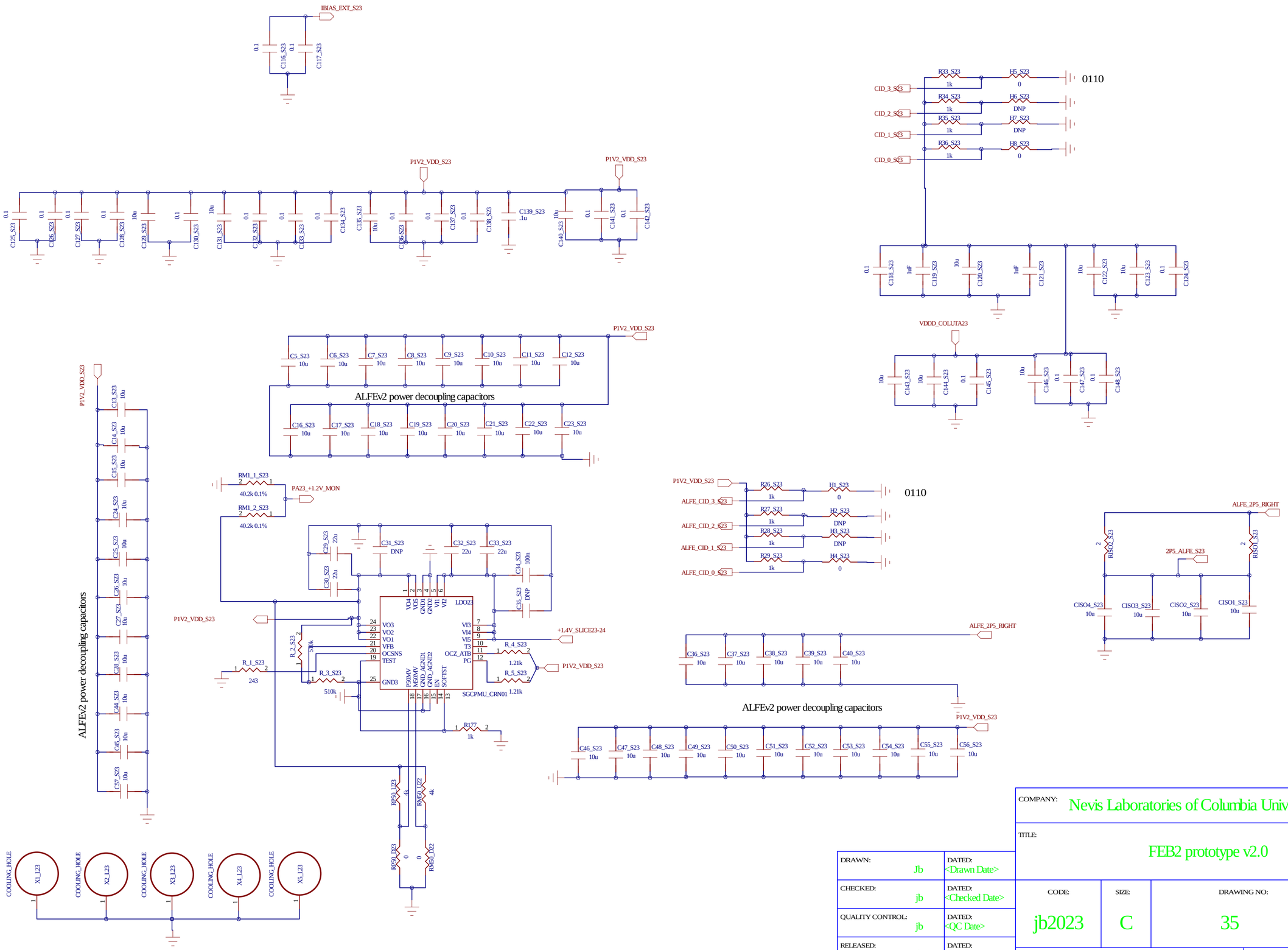

DRAWN: Jb	DATED: <Drawn Date>	COMPANY: Nevis Laboratories of Columbia University	
CHECKED: jb	DATED: <Checked Date>	TITLE: FEB2 prototype v2.0	
QUALITY CONTROL: jb	DATED: <QC Date>	CODE: jb2023	SIZE: C
RELEASED: jb	DATED: <Release Date>	DRAWING NO: 35	REV: v2.0
		SCALE: <Scale>	SHEET: 95 OF 155

REVISION RECORD			
LTR	ECO NO:	APPROVED:	DATE:

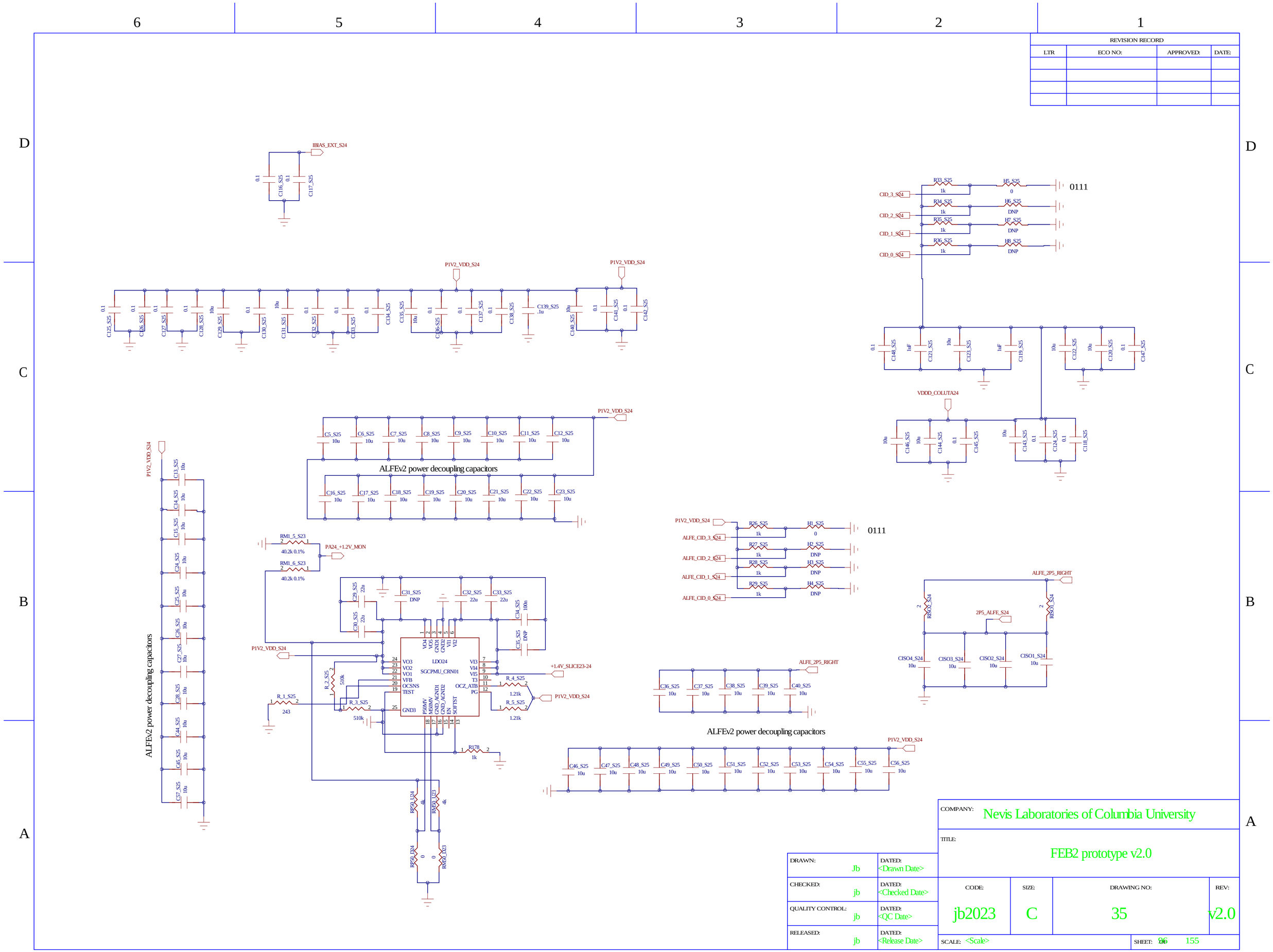

DRAWN: Jb	DATED: <Drawn Date>	COMPANY: Nevis Laboratories of Columbia University	
CHECKED: jb	DATED: <Checked Date>	TITLE: FEB2 prototype v2.0	
QUALITY CONTROL: jb	DATED: <QC Date>	CODE: jb2023 / SIZE: C / DRAWING NO: 35	REV: v2.0
RELEASED: jb	DATED: <Release Date>	SCALE: <Scale>	SHEET: 96 155

REVISION RECORD			
LTR	ECO NO:	APPROVED:	DATE:

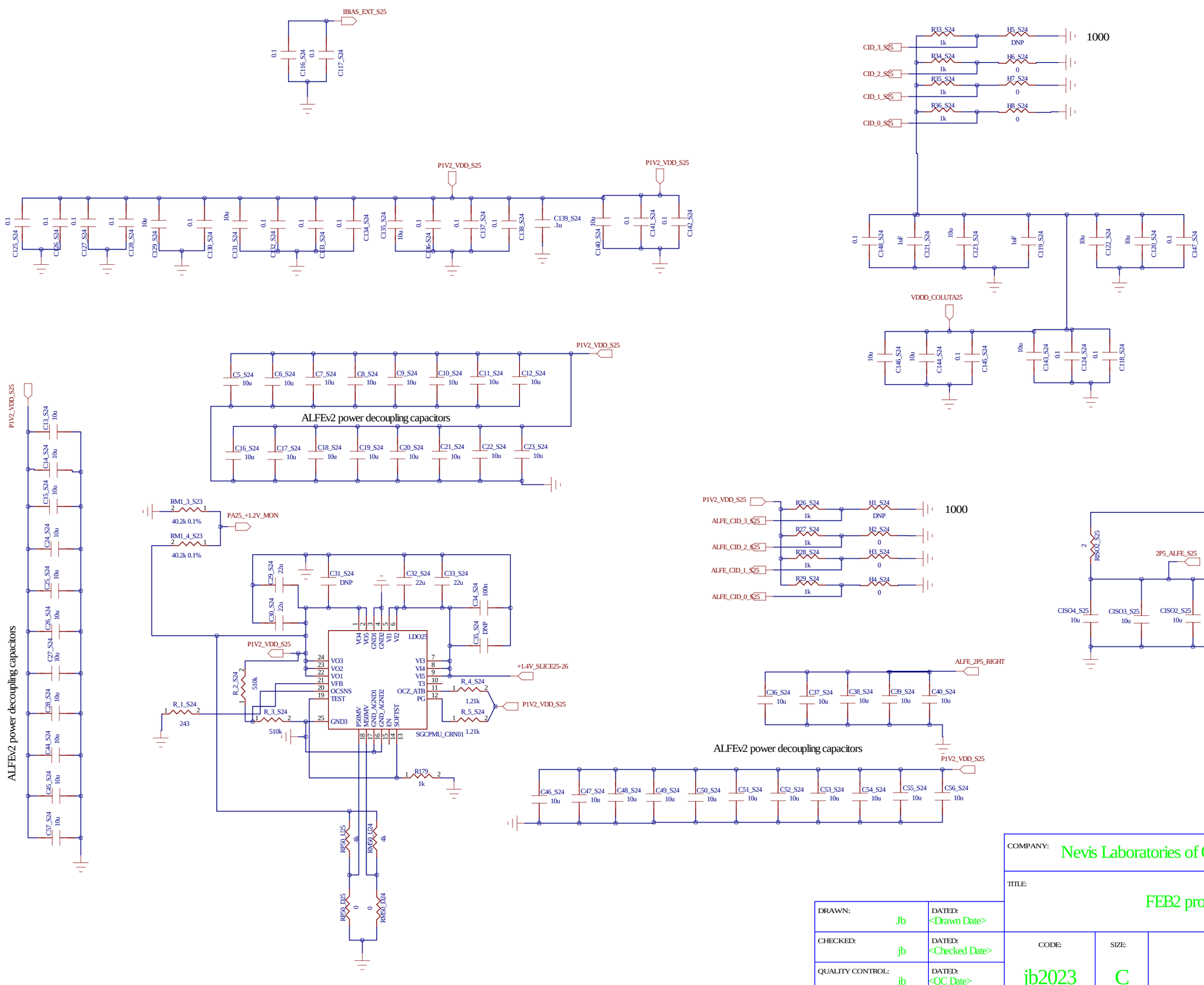

DRAWN: Jb	DATED: <Drawn Date>	COMPANY: Nevis Laboratories of Columbia University	
CHECKED: jb	DATED: <Checked Date>	TITLE: FEB2 prototype v2.0	
QUALITY CONTROL: jb	DATED: <QC Date>	CODE: jb2023	SIZE: C
RELEASED: jb	DATED: <Release Date>	DRAWING NO: 35	REV: v2.0
		SCALE: <Scale>	SHEET: 27 OF 155

REVISION RECORD			
LTR	ECO NO:	APPROVED:	DATE:

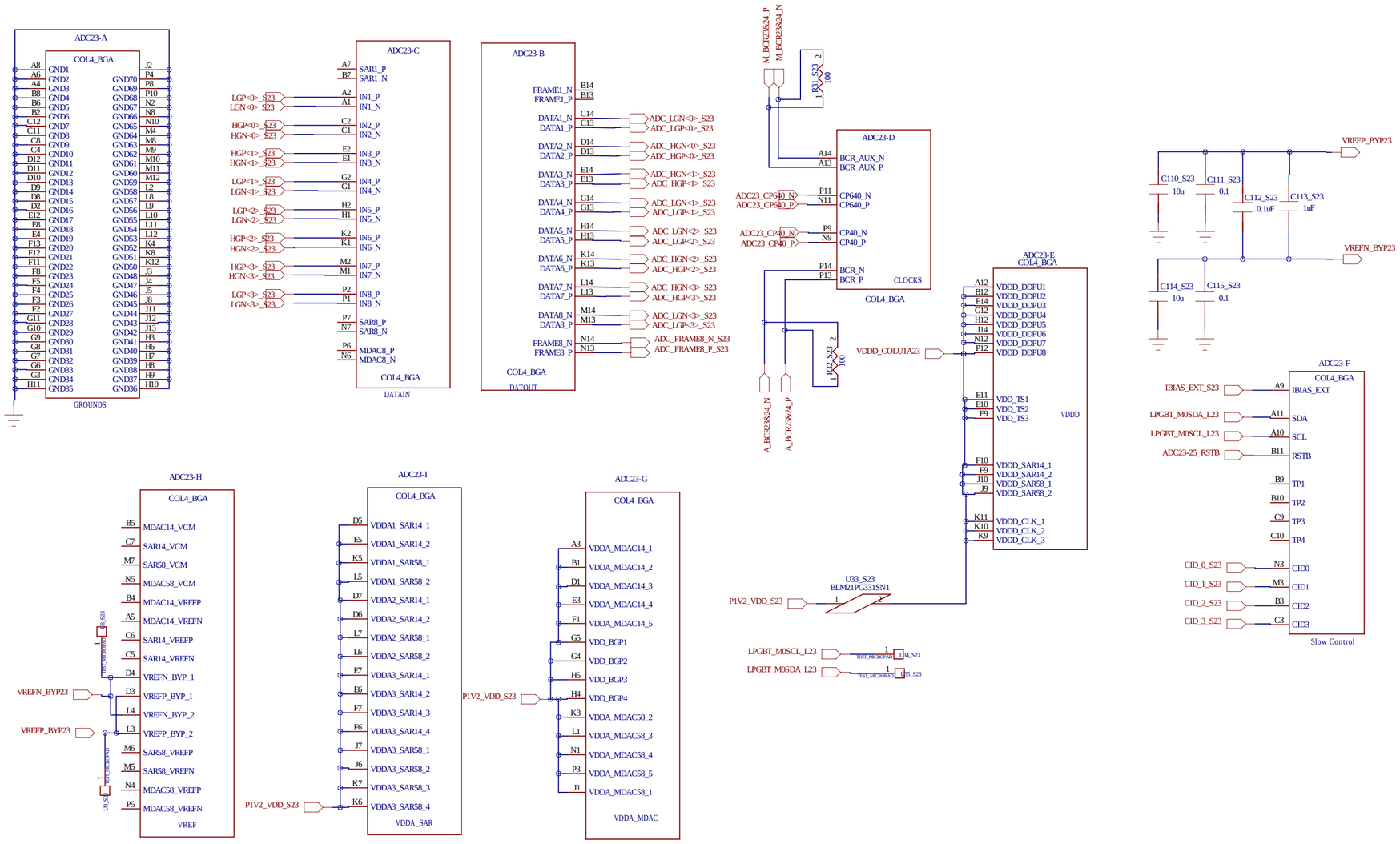

COMPANY: Nevis Laboratories of Columbia University			
TITLE: FEB2 prototype v2.0			
DRAWN: Jb	DATED: <Drawn Date>		
CHECKED: jb	DATED: <Checked Date>	CODE: jb2023	SIZE: C	DRAWING NO: 35	REV: v2.0
QUALITY CONTROL: jb	DATED: <QC Date>		
RELEASED: jb	DATED: <Release Date>	SCALE: <Scale>	SHEET: 23 OF 155

REVISION RECORD			
LTR	ECO NO:	APPROVED:	DATE:

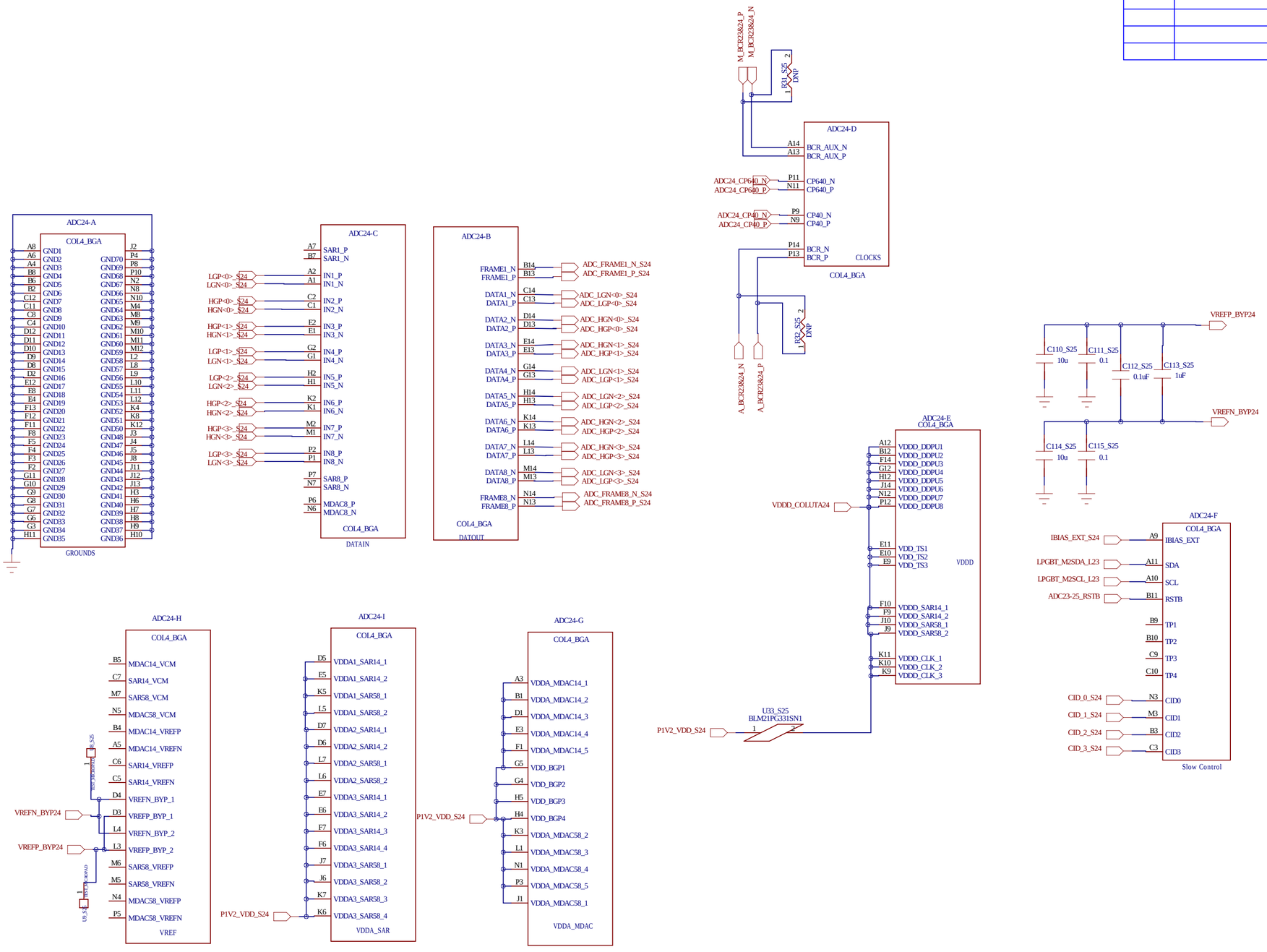

DRAWN: Jb	DATED: <Drawn Date>	COMPANY: Nevis Laboratories of Columbia University	
CHECKED: jb	DATED: <Checked Date>	TITLE: FEB2 prototype v2.0	
QUALITY CONTROL: jb	DATED: <QC Date>	CODE: jb2023	SIZE: C
RELEASED: jb	DATED: <Release Date>	DRAWING NO: 35	REV: v2.0
		SCALE: <Scale>	SHEET: 99 OF 155

REVISION RECORD			
LTR	ECO NO:	APPROVED:	DATE:

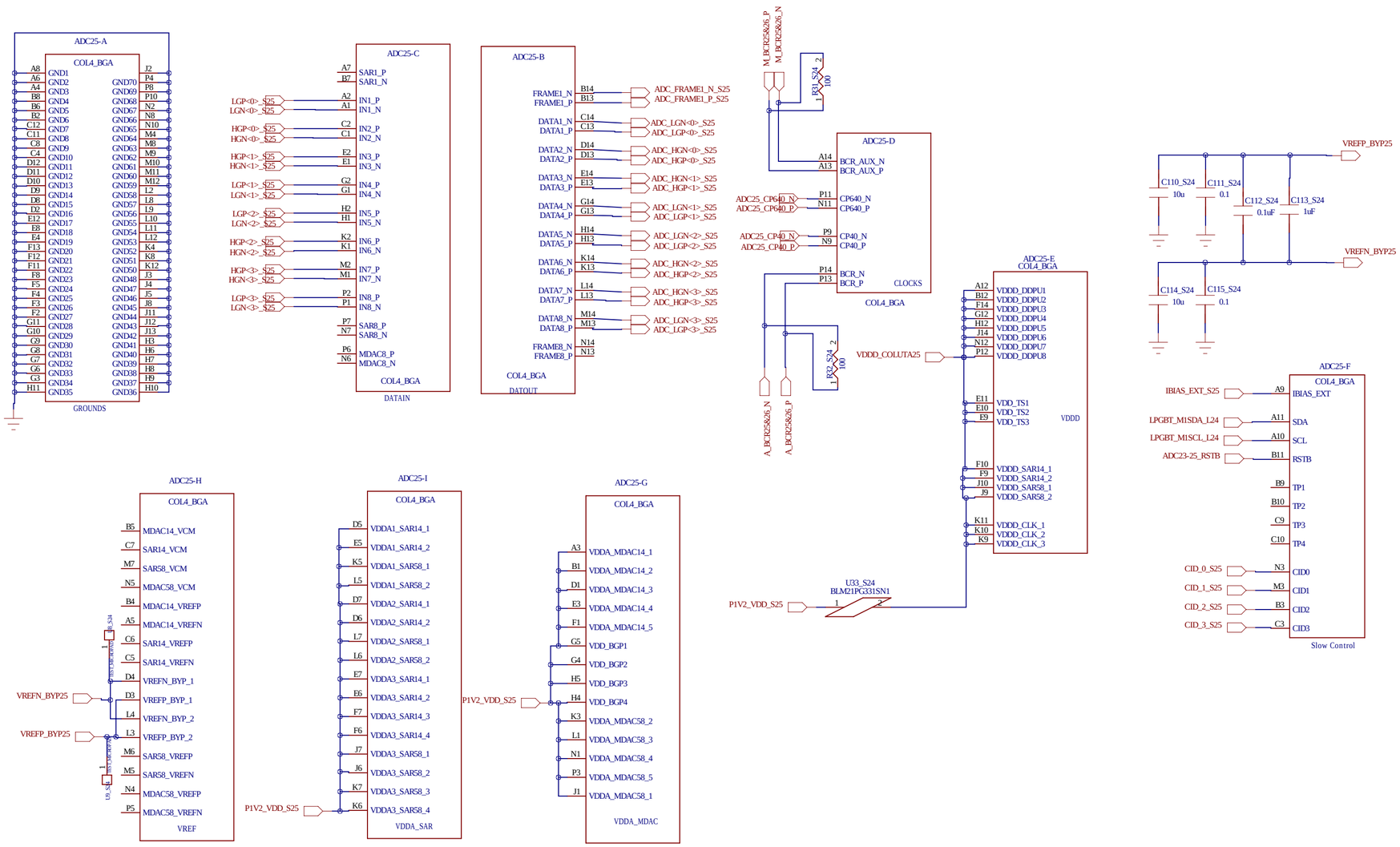

COMPANY: Nevis Laboratories of Columbia University				
TITLE: FEB2 prototype v2.0				
DRAWN: Jb	DATED: <Drawn Date>	CODE: jb2023	SIZE: C	DRAWING NO: 35 / REV: v2.0
CHECKED: jb	DATED: <Checked Date>			
QUALITY CONTROL: jb	DATED: <QC Date>			
RELEASED: jb	DATED: <Release Date>	SCALE: <Scale>		SHEET: 100 155

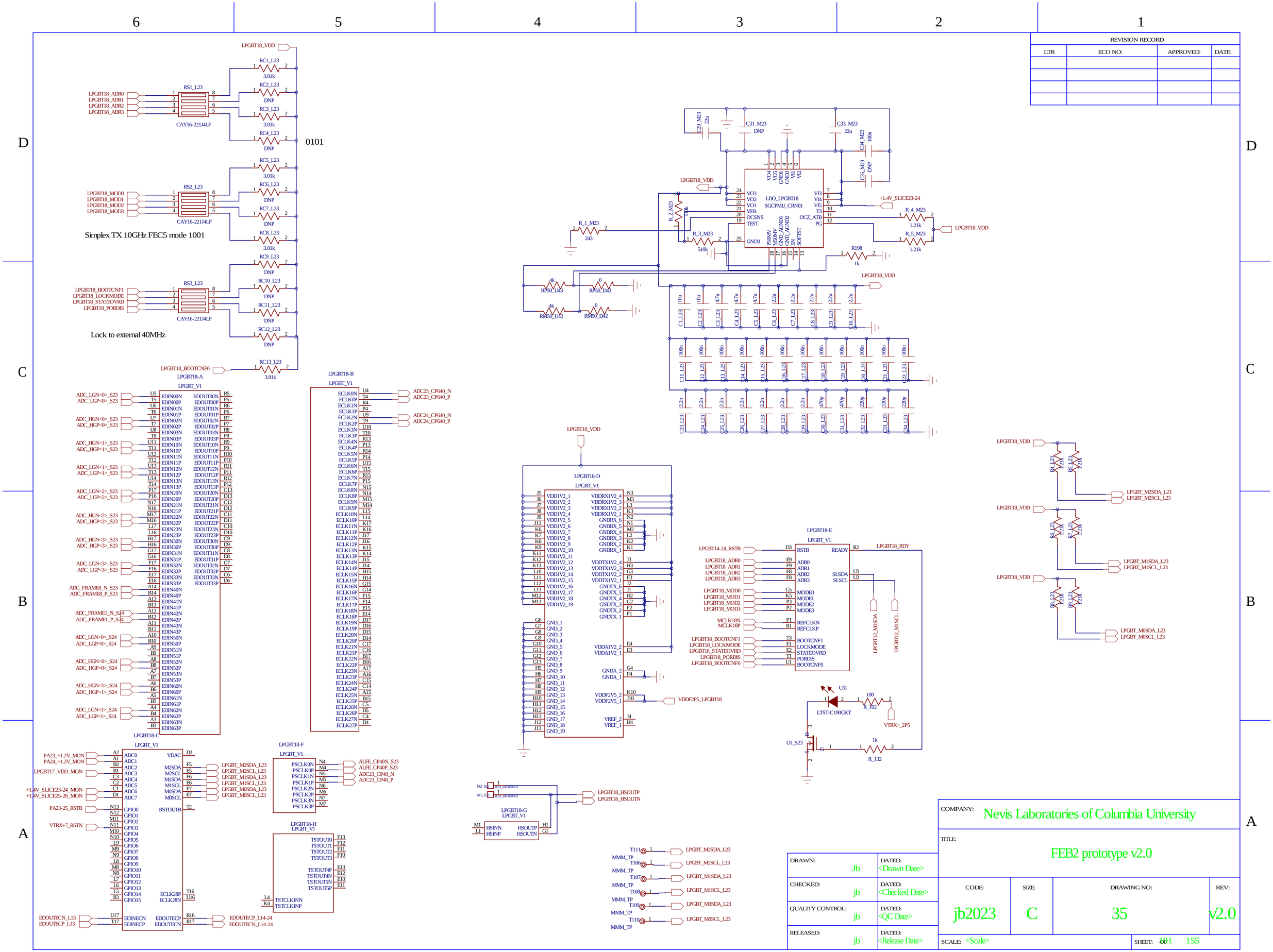
REVISION RECORD
LTR
ECO NO:
APPROVED:
DATE:
0101
Simplex TX 10GHz FEC5 mode 1001
Lock to external 40MHz
LDO_LPGBT18
SGCPMU_CRN01
LPGBT_V1
LPGBT18-A
LPGBT18-B
LPGBT18-C
LPGBT18-D
LPGBT18-E
LPGBT18-F
LPGBT18-G
LPGBT18-H
COMPANY:
Nevis Laboratories of Columbia University
TITLE:
FEB2 prototype v2.0
DRAWN:
Jb
DATED:
<Drawn Date>
CHECKED:
jb
DATED:
<Checked Date>
QUALITY CONTROL:
jb
DATED:
<QC Date>
RELEASED:
jb
DATED:
<Release Date>
CODE:
jb2023
SIZE:
C
DRAWING NO:
35
REV:
v2.0
SCALE:
<Scale>
SHEET:
101
155

REVISION RECORD			
LTR	ECO NO:	APPROVED:	DATE:

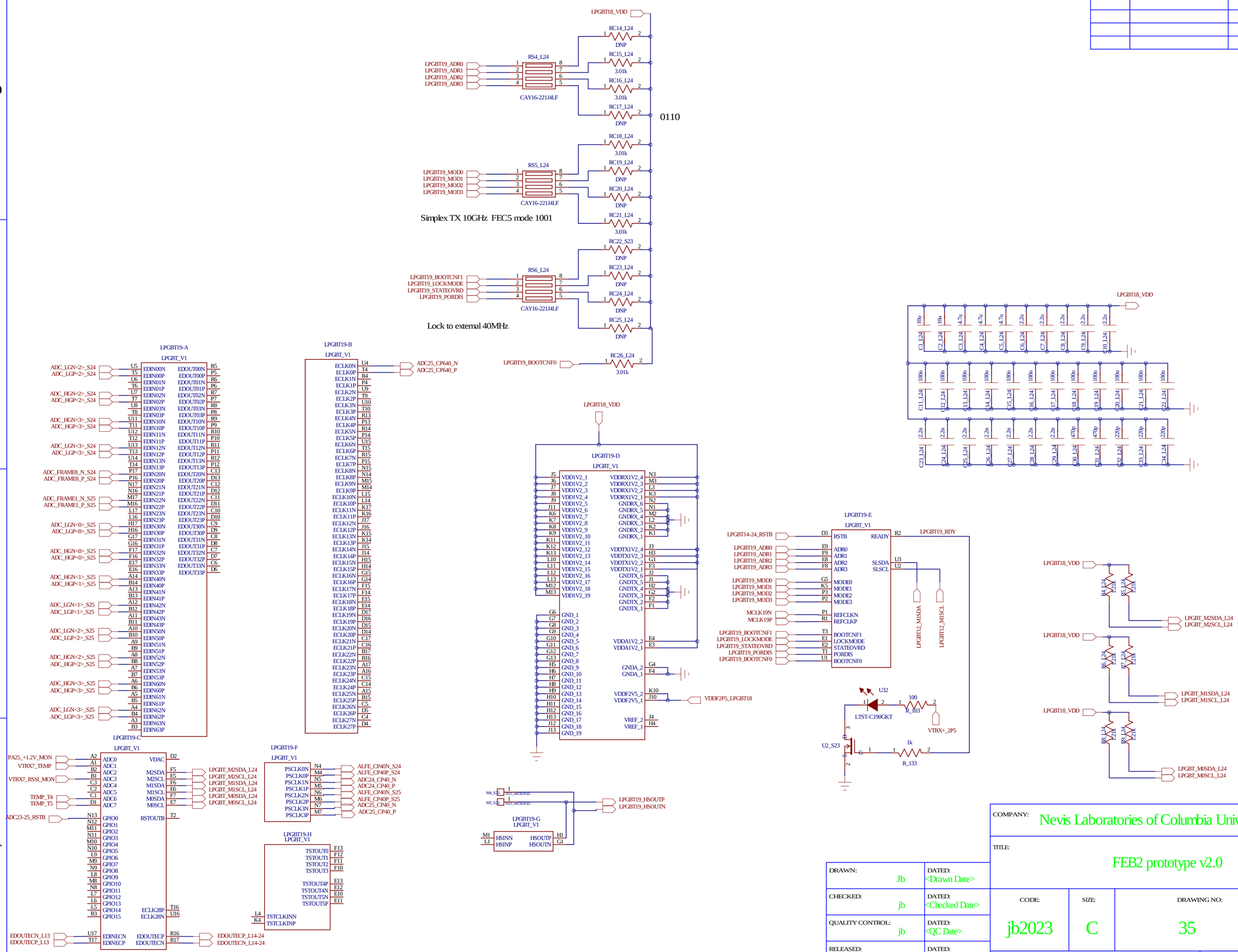

DRAWN: Jb	DATED: <Drawn Date>	COMPANY: Nevis Laboratories of Columbia University	
CHECKED: jb	DATED: <Checked Date>	TITLE: FEB2 prototype v2.0	
QUALITY CONTROL: jb	DATED: <QC Date>	CODE: jb2023	SIZE: C
RELEASED: jb	DATED: <Release Date>	DRAWING NO: 35	REV: v2.0
		SCALE: <Scale>	SHEET: 102 of 155

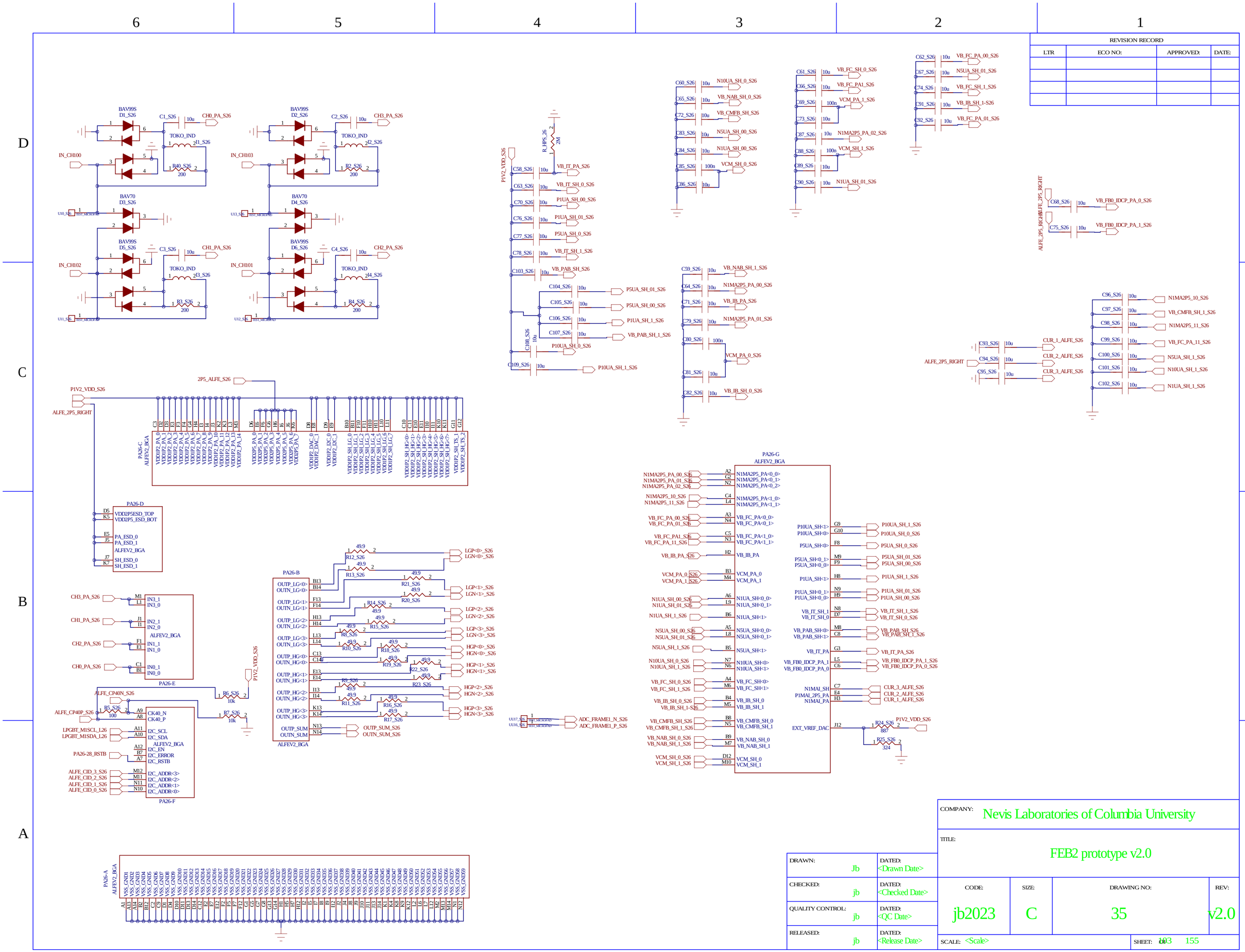
6
5
4
3
2
1
D
C
B
A
BAV99S D1_S26
BAV99S D2_S26
BAV70 D3_S26
BAV70 D4_S26
BAV99S D5_S26
BAV99S D6_S26
TOKO_IND
IN_CH100
IN_CH103
IN_CH102
IN_CH101
CH0_PA_S26
CH3_PA_S26
CH1_PA_S26
CH2_PA_S26
P1V2_VDD_S26
2P5_ALFE_S26
ALFE_2P5_RIGHT
PA26-C ALFEV2_BGA
PA26-D
PA26-E
PA26-F
PA26-G ALFEV2_BGA
PA26-B
ALFEV2_BGA
PA26-A ALFEV2_BGA
REVISION RECORD
LTR
ECO NO:
APPROVED:
DATE:
COMPANY:
Nevis Laboratories of Columbia University
TITLE:
FEB2 prototype v2.0
DRAWN:
Jb
DATED:
<Drawn Date>
CHECKED:
jb
DATED:
<Checked Date>
QUALITY CONTROL:
jb
DATED:
<QC Date>
RELEASED:
jb
DATED:
<Release Date>
CODE:
jb2023
SIZE:
C
DRAWING NO:
35
REV:
v2.0
SCALE:
<Scale>
SHEET:
103
155

REVISION RECORD			
LTR	ECO NO:	APPROVED:	DATE:

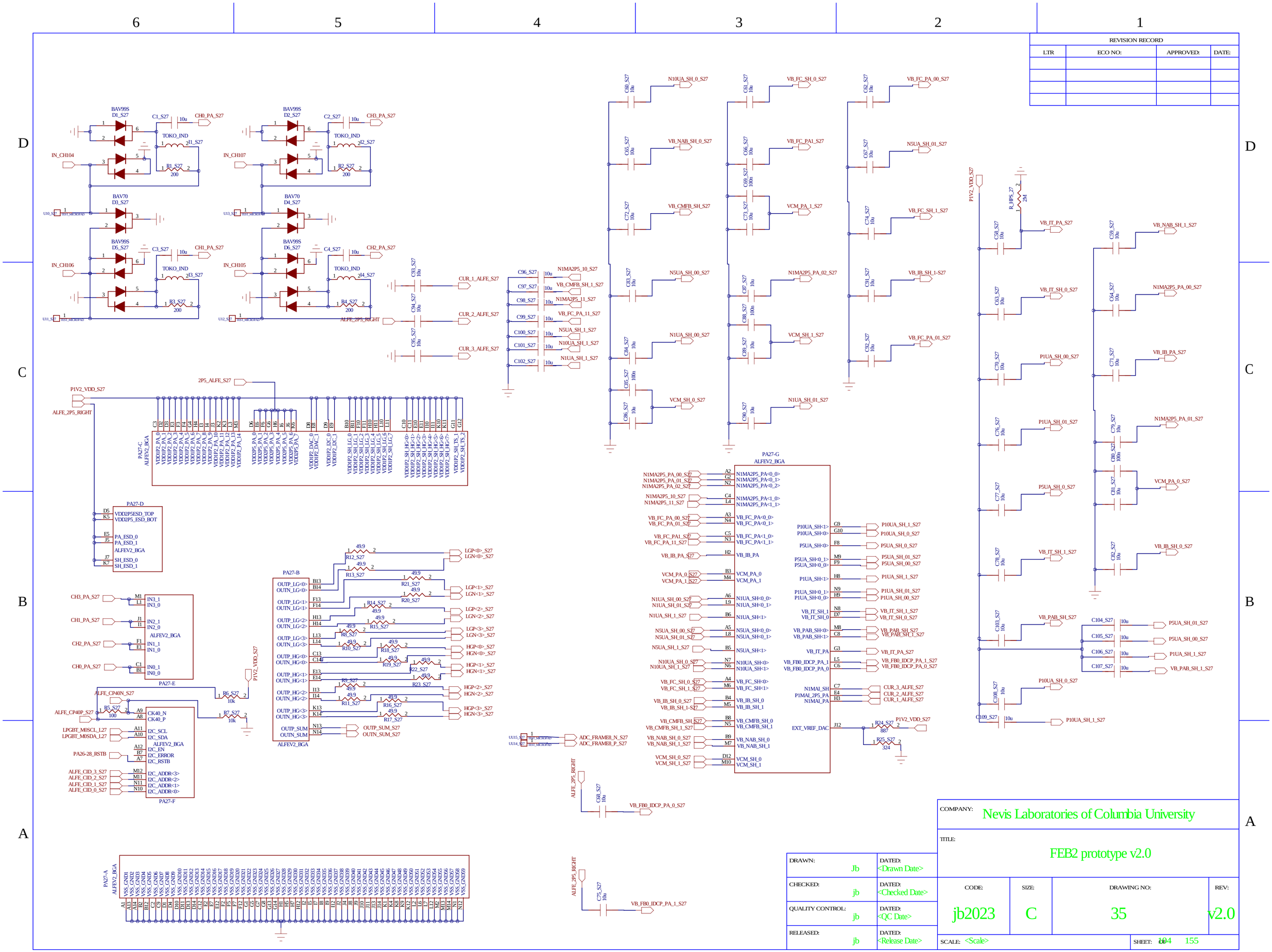

COMPANY: Nevis Laboratories of Columbia University

TITLE: FEB2 prototype v2.0

DRAWN: Jb	DATED: <Drawn Date>	CODE: jb2023	SIZE: C	DRAWING NO: 35	REV: v2.0
CHECKED: jb	DATED: <Checked Date>				
QUALITY CONTROL: jb	DATED: <QC Date>				
RELEASED: jb	DATED: <Release Date>	SCALE: <Scale>		SHEET: 104 155	

REVISION RECORD			
LTR	ECO NO:	APPROVED:	DATE:

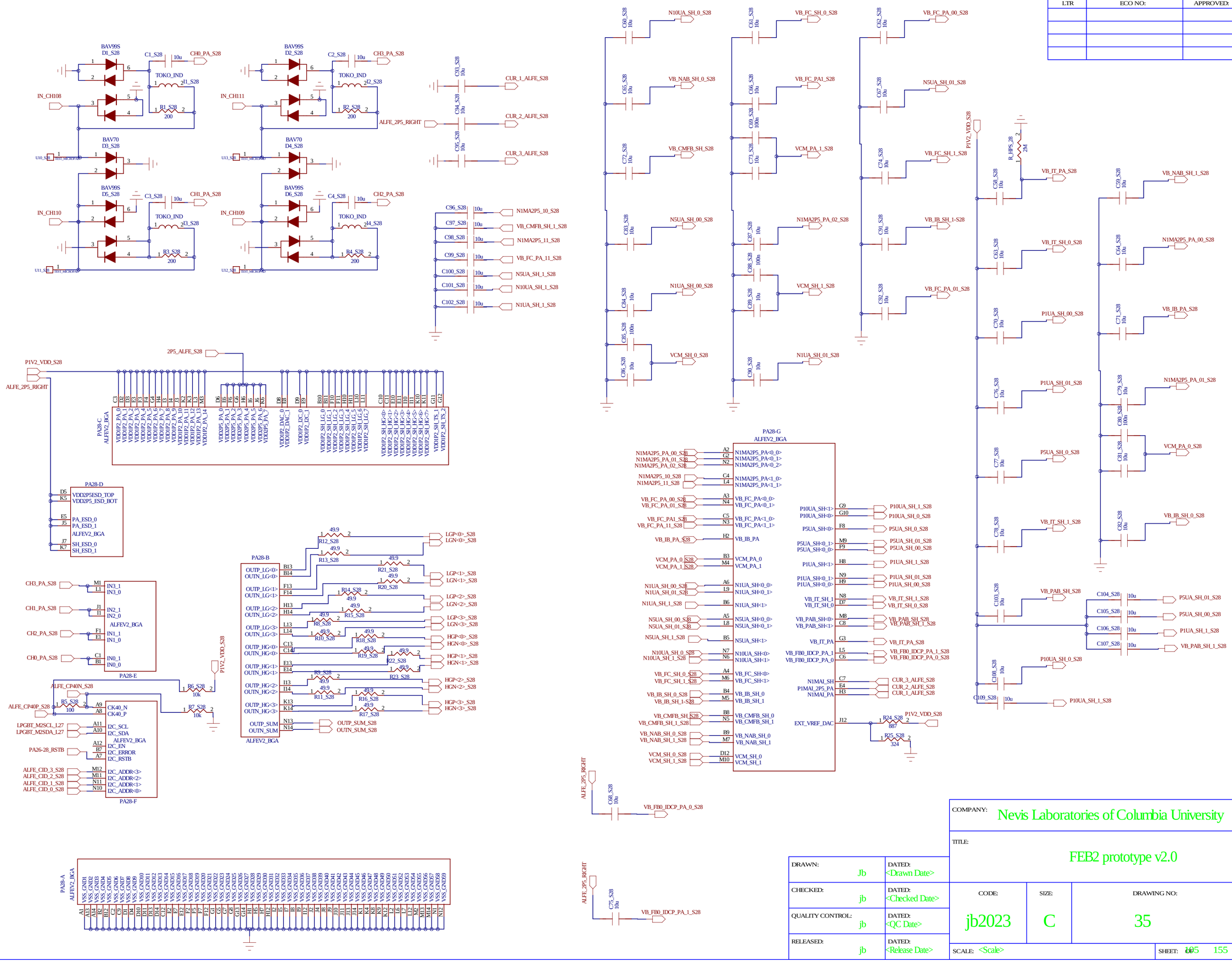

DRAWN: Jb	DATED: <Drawn Date>	COMPANY: Nevis Laboratories of Columbia University	
CHECKED: jb	DATED: <Checked Date>	TITLE: FEB2 prototype v2.0	
QUALITY CONTROL: jb	DATED: <QC Date>	CODE: jb2023	SIZE: C
RELEASED: jb	DATED: <Release Date>	DRAWING NO: 35	REV: v2.0
		SCALE: <Scale>	SHEET: 105 155

REVISION RECORD			
LTR	ECO NO:	APPROVED:	DATE:

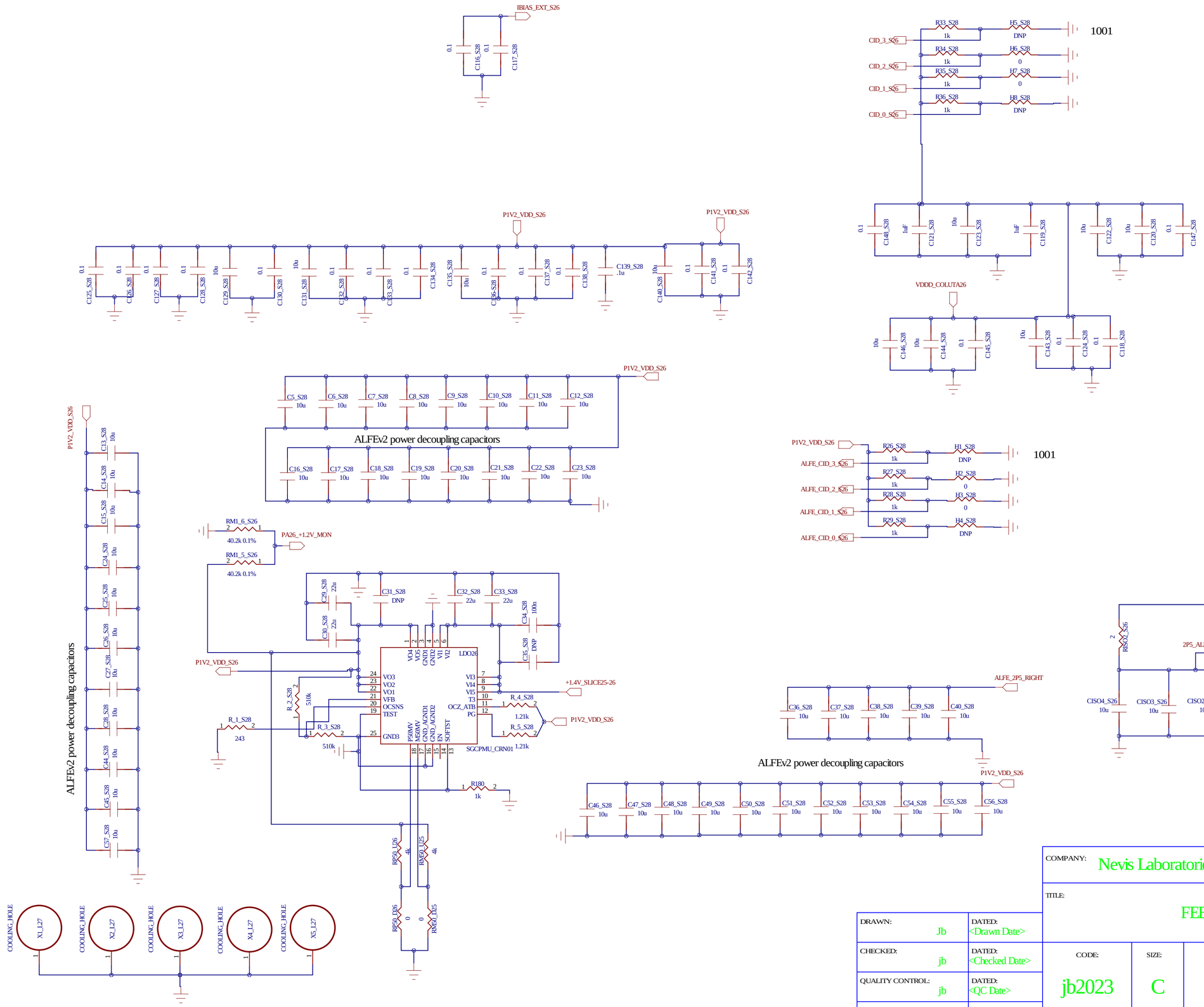

DRAWN: Jb	DATED: <Drawn Date>	COMPANY: Nevis Laboratories of Columbia University	
CHECKED: jb	DATED: <Checked Date>	TITLE: FEB2 prototype v2.0	
QUALITY CONTROL: jb	DATED: <QC Date>	CODE: jb2023	SIZE: C
RELEASED: jb	DATED: <Release Date>	DRAWING NO: 35	REV: v2.0
		SCALE: <Scale>	SHEET: 106 OF 155

REVISION RECORD			
LTR	ECO NO:	APPROVED:	DATE:

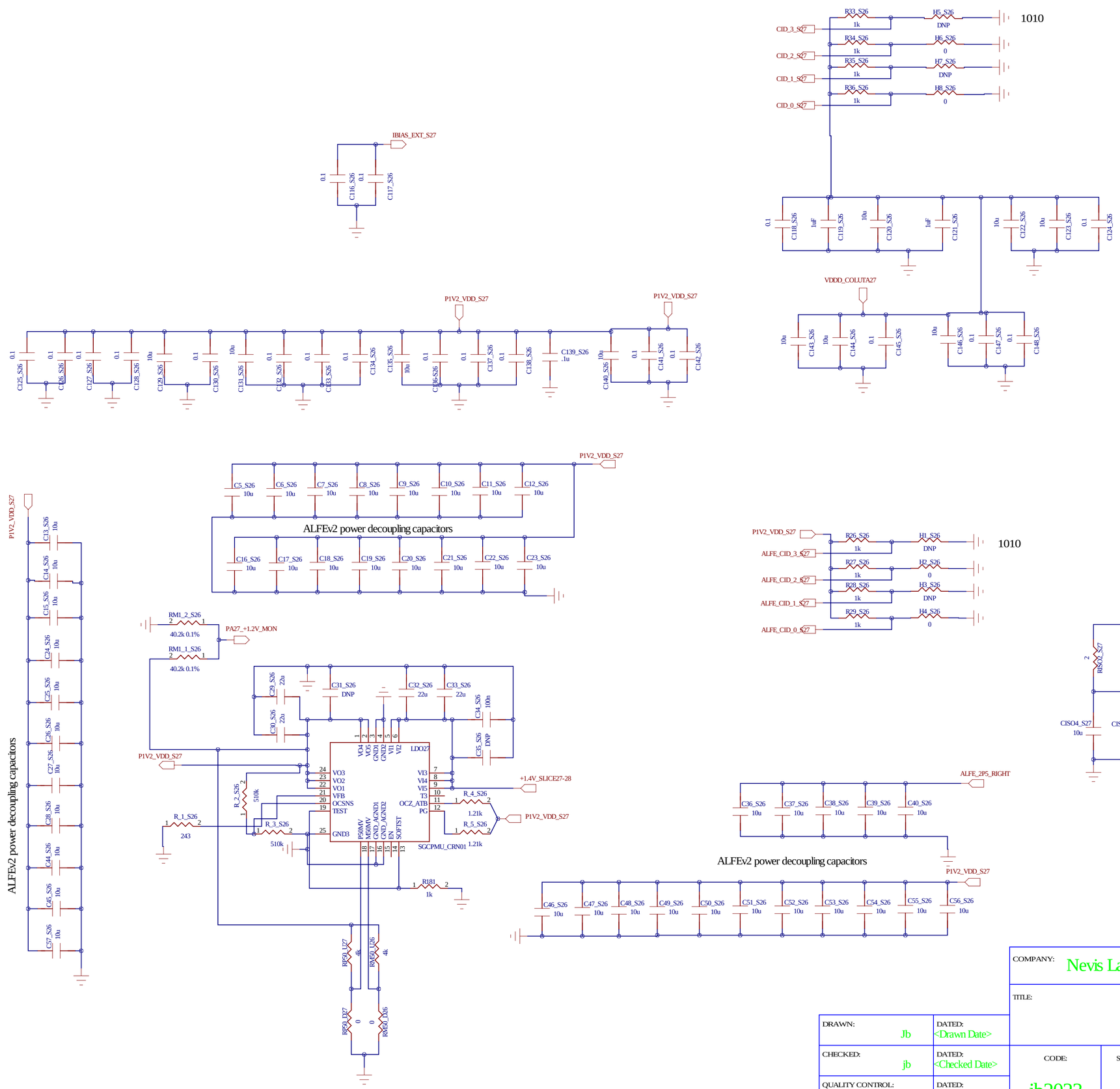

DRAWN: Jb	DATED: <Drawn Date>	COMPANY: Nevis Laboratories of Columbia University			
CHECKED: jb	DATED: <Checked Date>	TITLE: FEB2 prototype v2.0			
QUALITY CONTROL: jb	DATED: <QC Date>	CODE: jb2023	SIZE: C	DRAWING NO: 35	REV: v2.0
RELEASED: jb	DATED: <Release Date>	SCALE: <Scale>		SHEET: 107 OF 155	

REVISION RECORD			
LTR	ECO NO:	APPROVED:	DATE:

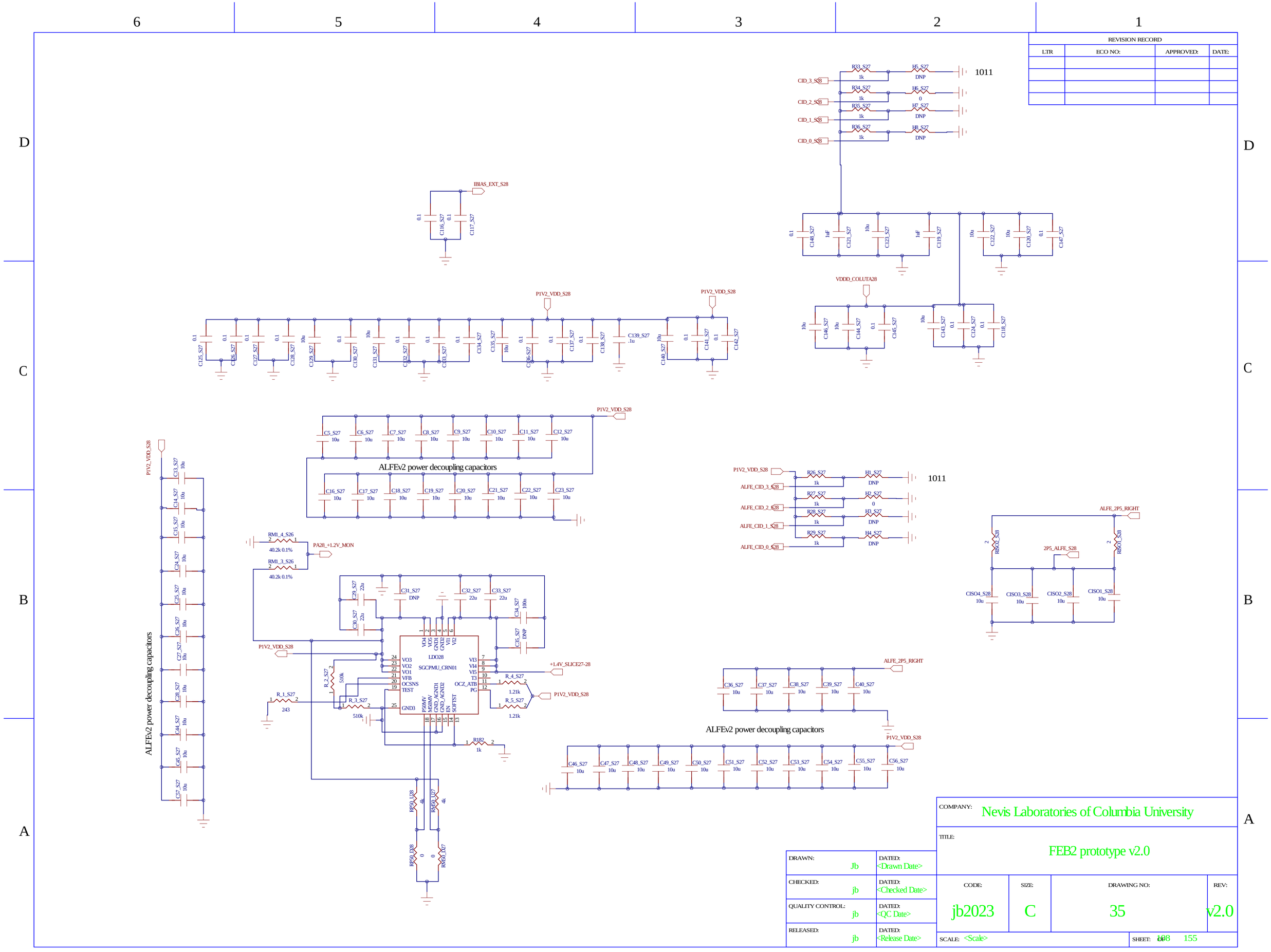

DRAWN: Jb	DATED: <Drawn Date>	COMPANY: Nevis Laboratories of Columbia University		
CHECKED: jb	DATED: <Checked Date>	TITLE: FEB2 prototype v2.0		
QUALITY CONTROL: jb	DATED: <QC Date>	CODE: jb2023	SIZE: C	DRAWING NO: 35 / REV: v2.0
RELEASED: jb	DATED: <Release Date>	SCALE: <Scale>	SHEET: 108 155	

REVISION RECORD			
LTR	ECO NO:	APPROVED:	DATE:

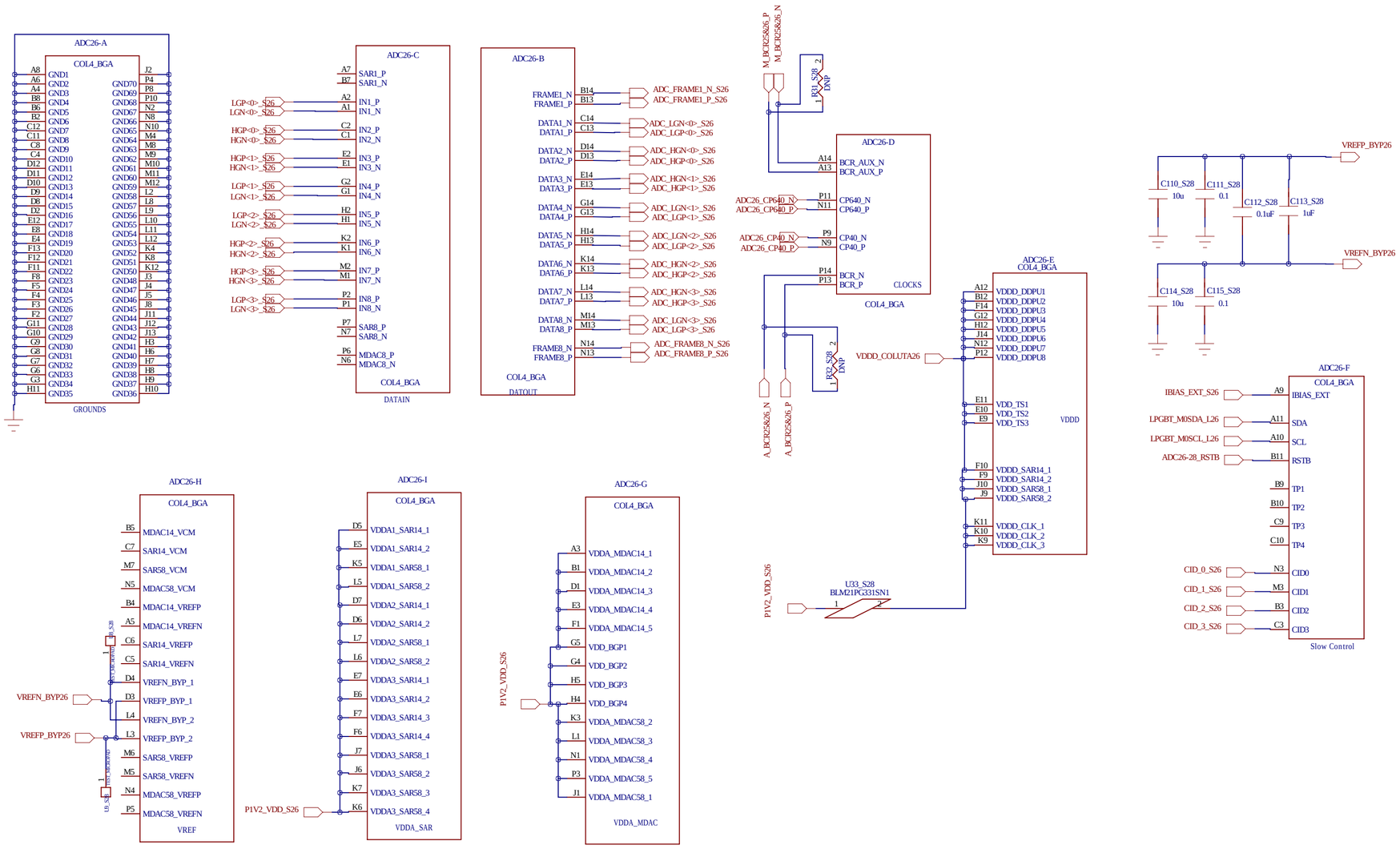

COMPANY: Nevis Laboratories of Columbia University					
TITLE: FEB2 prototype v2.0					
DRAWN: Jb	DATED: <Drawn Date>	CODE: jb2023	SIZE: C	DRAWING NO: 35	REV: v2.0
CHECKED: jb	DATED: <Checked Date>				
QUALITY CONTROL: jb	DATED: <QC Date>				
RELEASED: jb	DATED: <Release Date>	SCALE: <Scale>		SHEET: 109 155	

REVISION RECORD			
LTR	ECO NO:	APPROVED:	DATE:

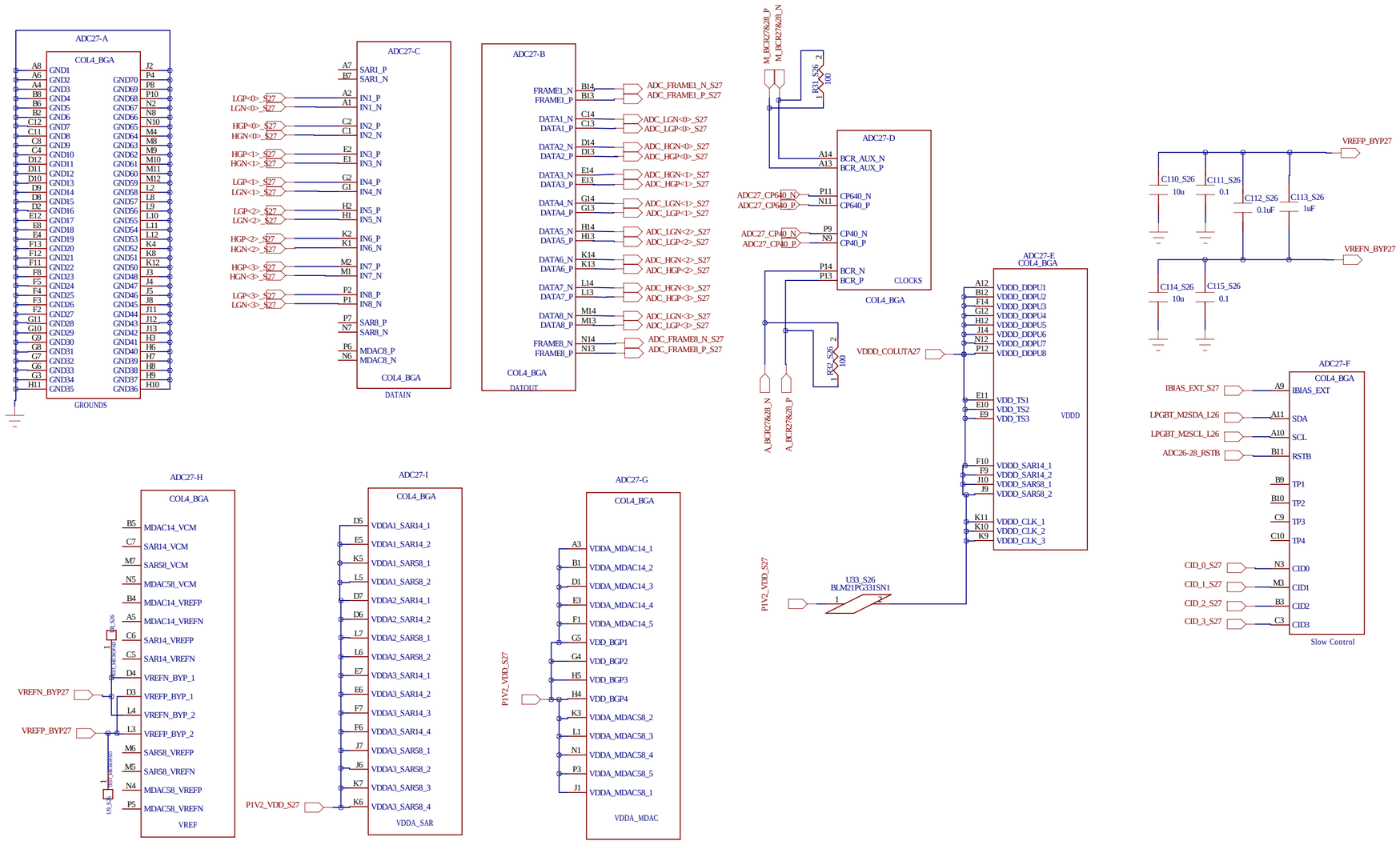

COMPANY: Nevis Laboratories of Columbia University			
TITLE: FEB2 prototype v2.0			
DRAWN: Jb	DATED: <Drawn Date>		
CHECKED: jb	DATED: <Checked Date>		
QUALITY CONTROL: jb	DATED: <QC Date>		
RELEASED: jb	DATED: <Release Date>		
CODE: jb2023	SIZE: C	DRAWING NO: 35	REV: v2.0
SCALE: <Scale>		SHEET: 110 OF 155	

REVISION RECORD			
LTR	ECO NO:	APPROVED:	DATE:

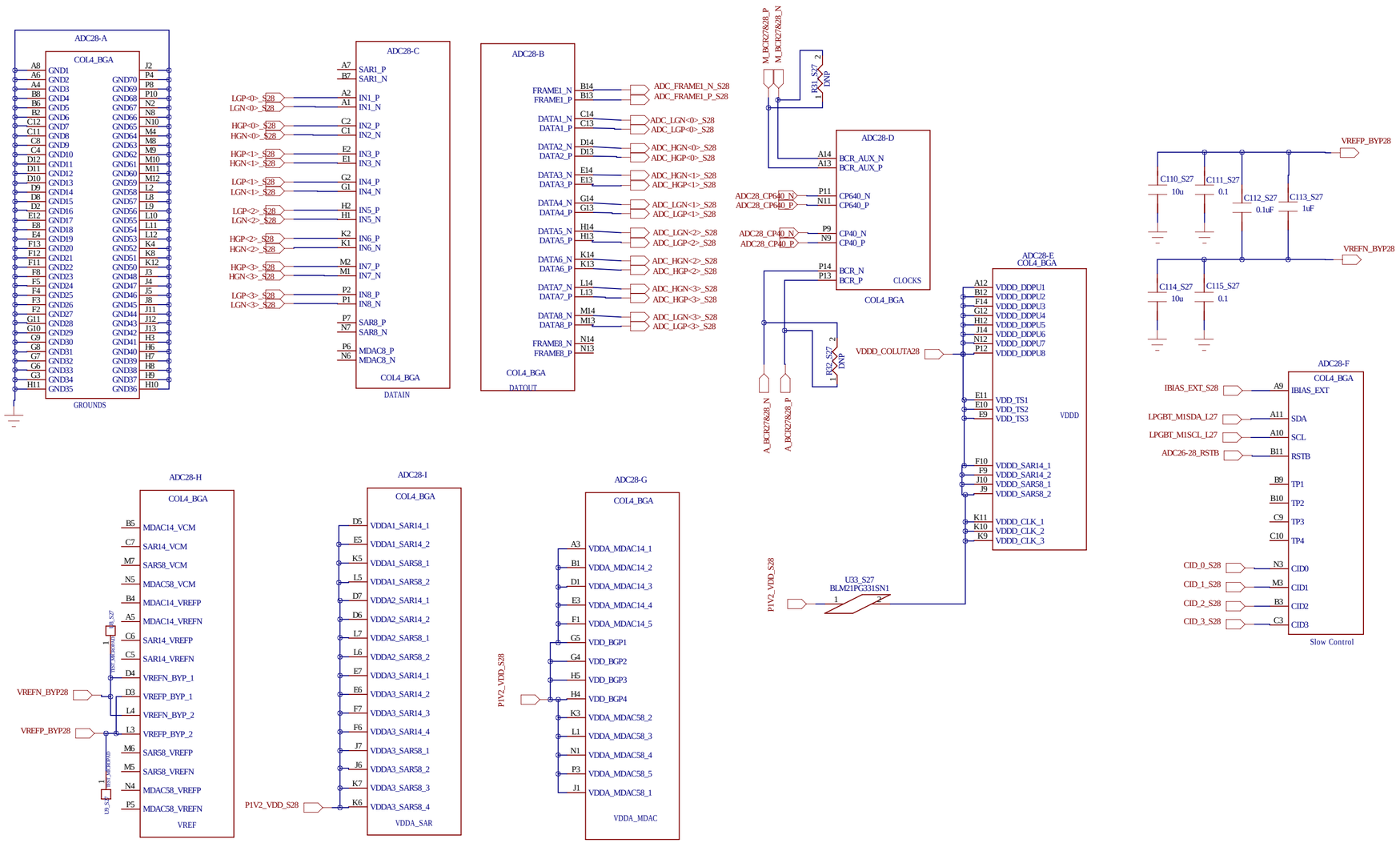

COMPANY: Nevis Laboratories of Columbia University					
TITLE: FEB2 prototype v2.0					
DRAWN: Jb	DATED: <Drawn Date>	CODE: jb2023	SIZE: C	DRAWING NO: 35	REV: v2.0
CHECKED: jb	DATED: <Checked Date>				
QUALITY CONTROL: jb	DATED: <QC Date>				
RELEASED: jb	DATED: <Release Date>	SCALE: <Scale>		SHEET: 61 OF 155	

REVISION RECORD			
LTR	ECO NO:	APPROVED:	DATE:

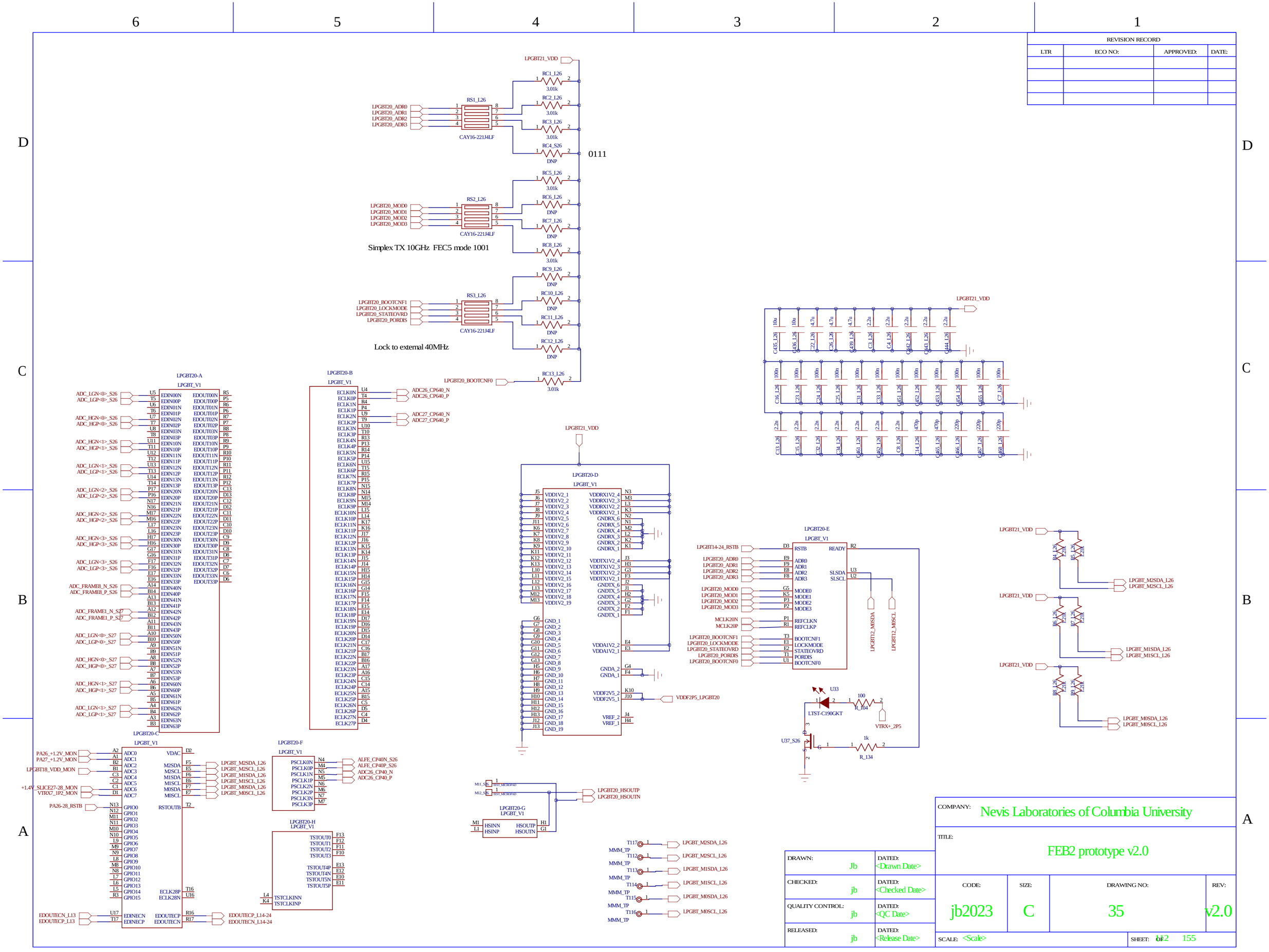

DRAWN: Jb	DATED: <Drawn Date>	COMPANY: Nevis Laboratories of Columbia University	
CHECKED: jb	DATED: <Checked Date>	TITLE: FEB2 prototype v2.0	
QUALITY CONTROL: jb	DATED: <QC Date>	CODE: jb2023	SIZE: C
RELEASED: jb	DATED: <Release Date>	DRAWING NO: 35	REV: v2.0
		SCALE: <Scale>	SHEET: 112 OF 155

REVISION RECORD			
LTR	ECO NO:	APPROVED:	DATE:

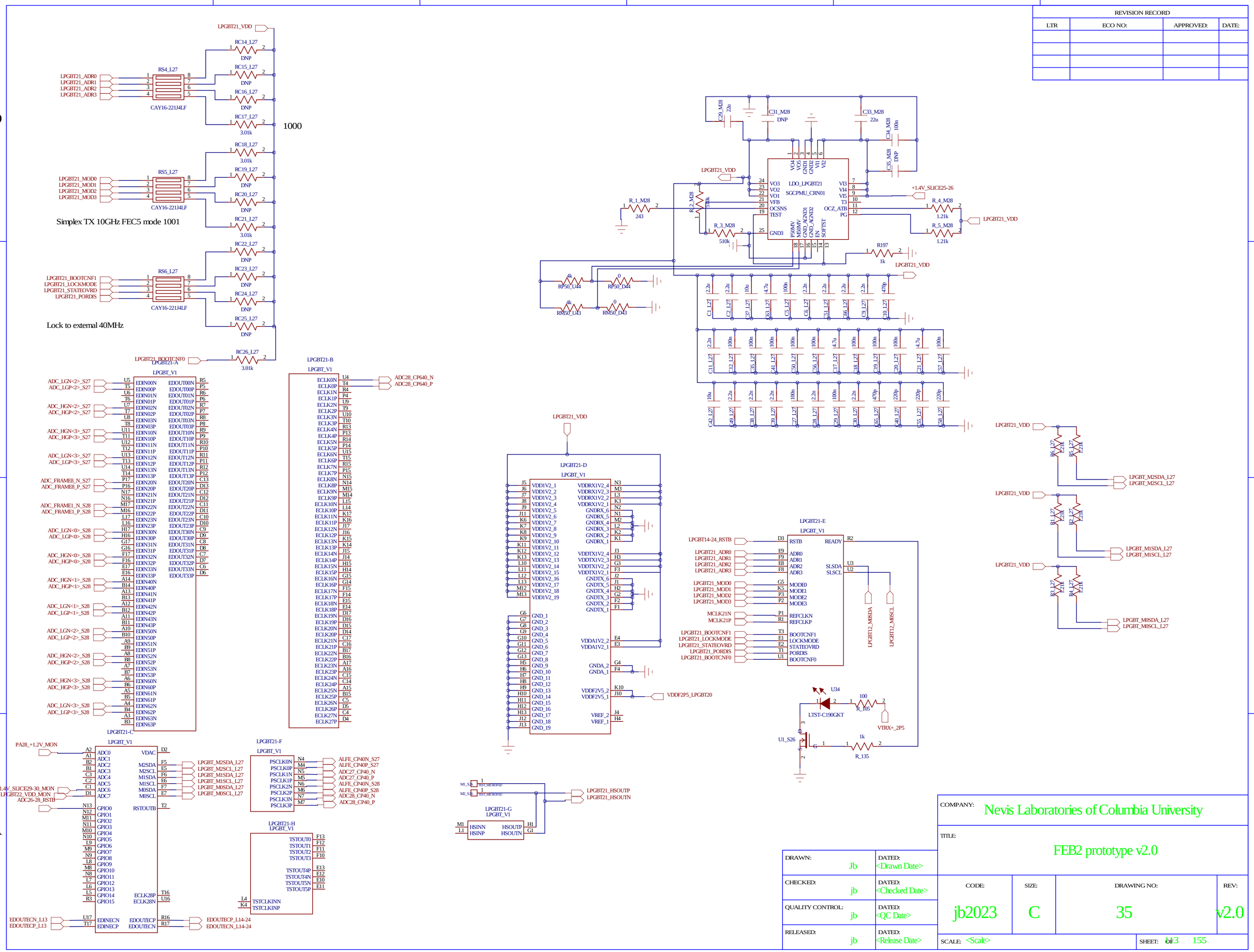

DRAWN: Jb	DATED: <Drawn Date>	COMPANY: Nevis Laboratories of Columbia University	
CHECKED: jb	DATED: <Checked Date>	TITLE: FEB2 prototype v2.0	
QUALITY CONTROL: jb	DATED: <QC Date>	CODE: jb2023	SIZE: C
RELEASED: jb	DATED: <Release Date>	DRAWING NO: 35	REV: v2.0
		SCALE: <Scale>	SHEET: 143 OF 155

REVISION RECORD			
LTR	ECO NO:	APPROVED:	DATE:

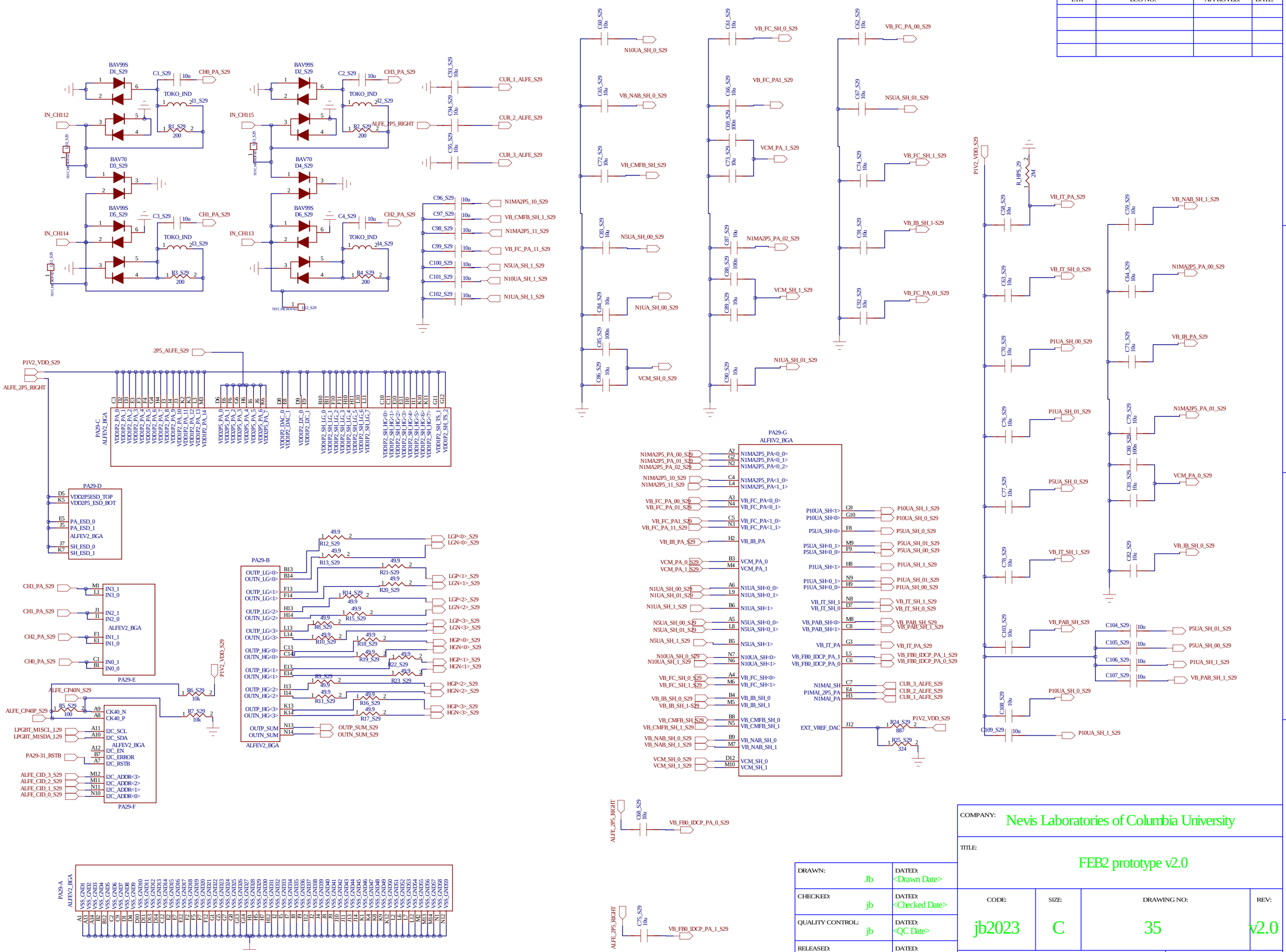

DRAWN: Jb	DATED: <Drawn Date>	COMPANY: Nevis Laboratories of Columbia University	
CHECKED: jb	DATED: <Checked Date>	TITLE: FEB2 prototype v2.0	
QUALITY CONTROL: jb	DATED: <QC Date>	CODE: jb2023 / SIZE: C / DRAWING NO: 35	REV: v2.0
RELEASED: jb	DATED: <Release Date>	SCALE: <Scale>	SHEET: 14 OF 155

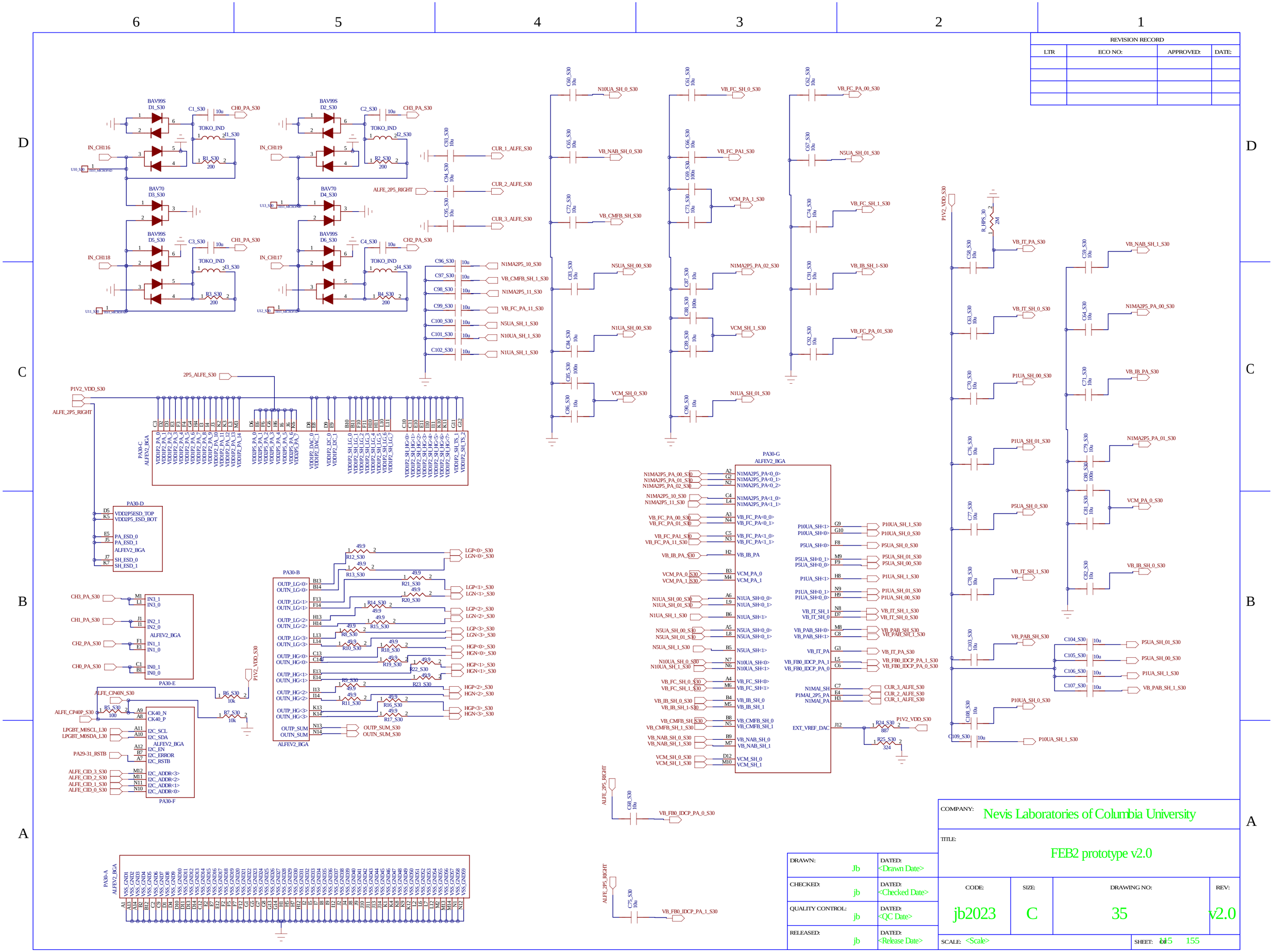

REVISION RECORD			
LTR	ECO NO:	APPROVED:	DATE:

COMPANY: Nevis Laboratories of Columbia University

TITLE: FEB2 prototype v2.0

DRAWN: Jb	DATED: <Drawn Date>		
CHECKED: jb	DATED: <Checked Date>		
QUALITY CONTROL: jb	DATED: <QC Date>		
RELEASED: jb	DATED: <Release Date>		

CODE:	SIZE:	DRAWING NO:	REV:
jb2023	C	35	v2.0

SCALE: <Scale>

SHEET: 115 OF 155

REVISION RECORD			
LTR	ECO NO:	APPROVED:	DATE:

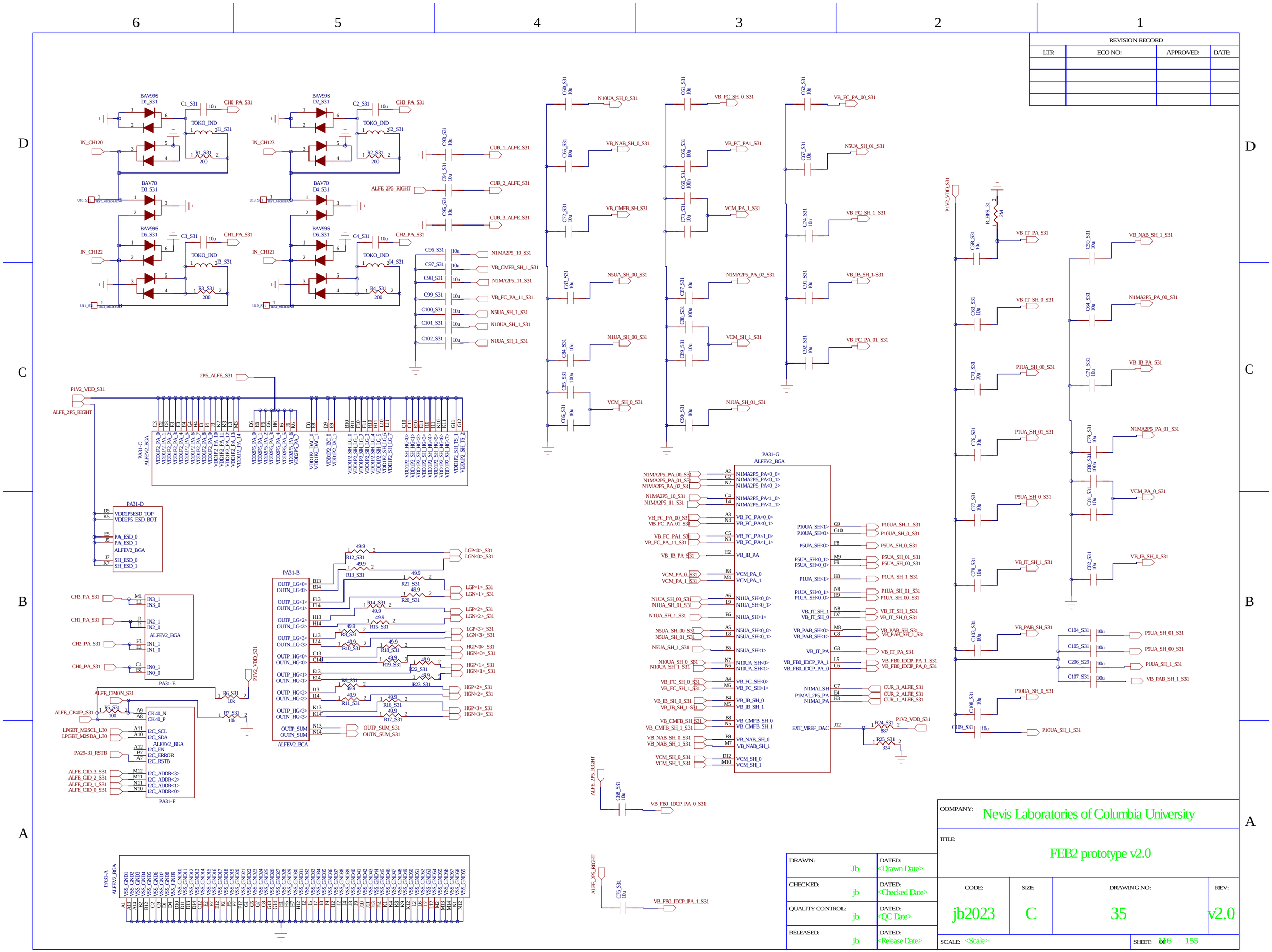

REVISION RECORD			
LTR	ECO NO:	APPROVED:	DATE:

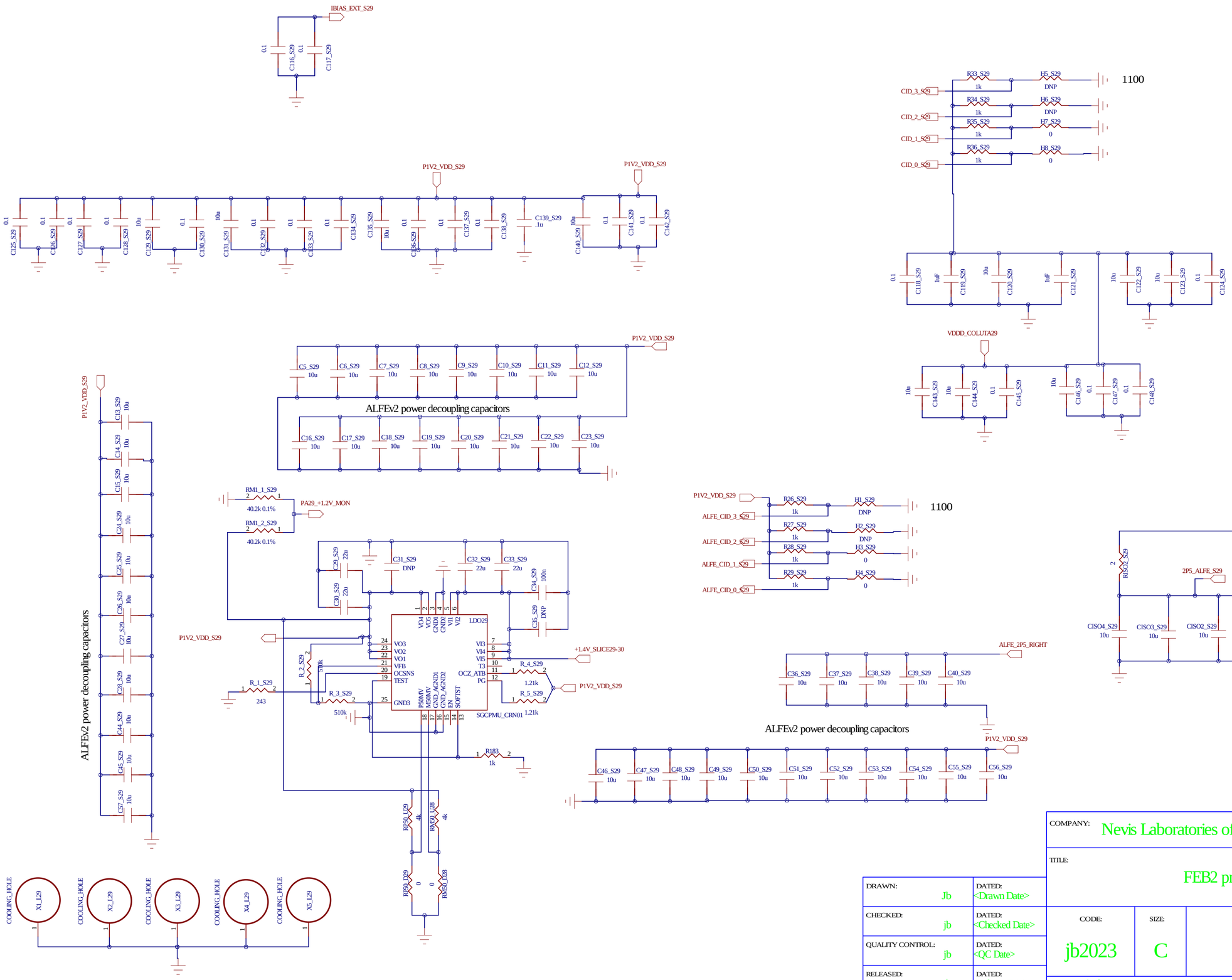

DRAWN: Jb	DATED: <Drawn Date>	COMPANY: Nevis Laboratories of Columbia University	
CHECKED: jb	DATED: <Checked Date>	TITLE: FEB2 prototype v2.0	
QUALITY CONTROL: jb	DATED: <QC Date>	CODE: jb2023	SIZE: C
RELEASED: jb	DATED: <Release Date>	DRAWING NO: 35	REV: v2.0
		SCALE: <Scale>	SHEET: 147 OF 155

REVISION RECORD			
LTR	ECO NO:	APPROVED:	DATE:

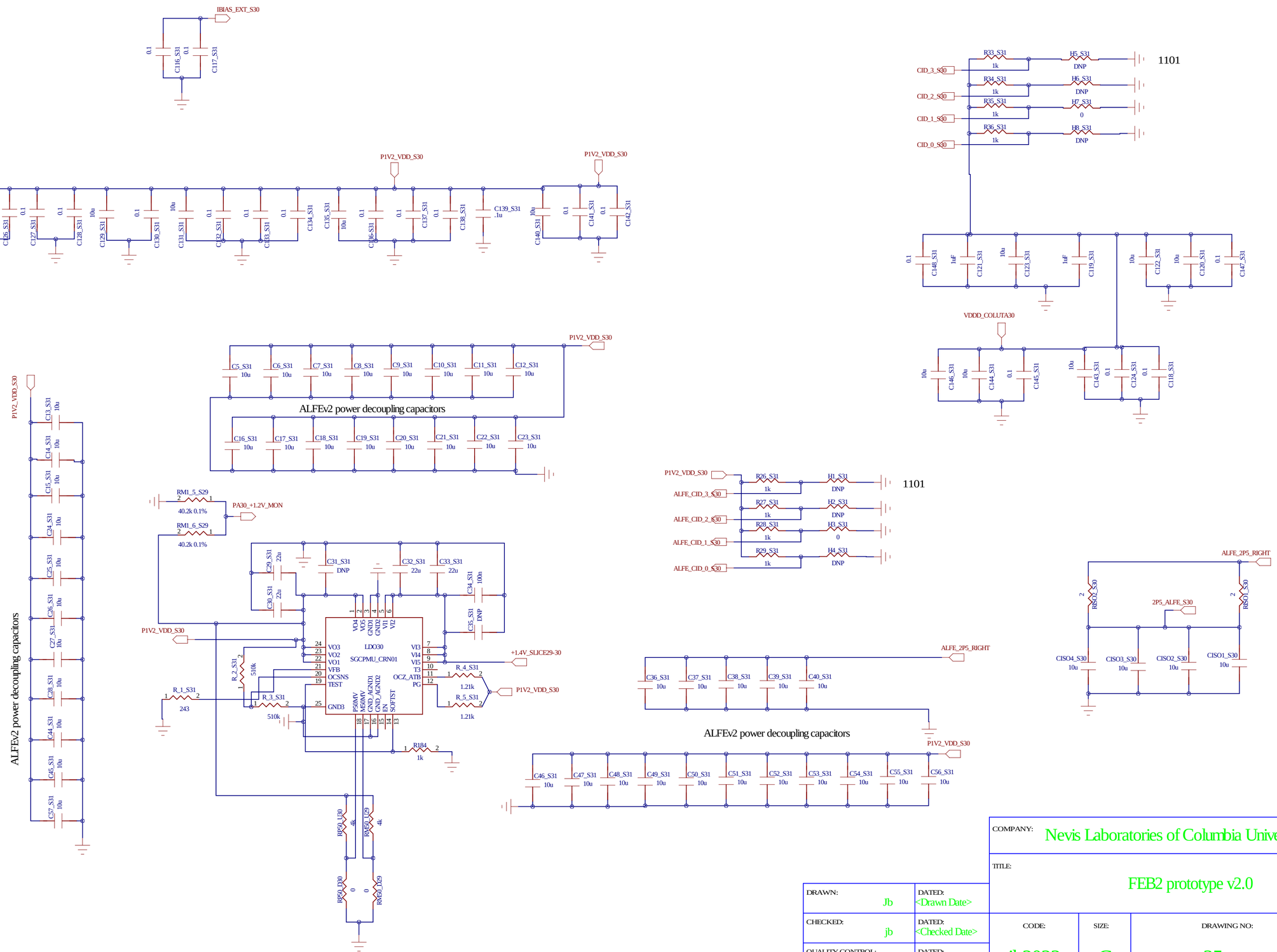

DRAWN: Jb	DATED: <Drawn Date>	COMPANY: Nevis Laboratories of Columbia University	
CHECKED: jb	DATED: <Checked Date>	TITLE: FEB2 prototype v2.0	
QUALITY CONTROL: jb	DATED: <QC Date>	CODE: jb2023	SIZE: C
RELEASED: jb	DATED: <Release Date>	DRAWING NO: 35	REV: v2.0
		SCALE: <Scale>	SHEET: 118 OF 155

REVISION RECORD			
LTR	ECO NO:	APPROVED:	DATE:

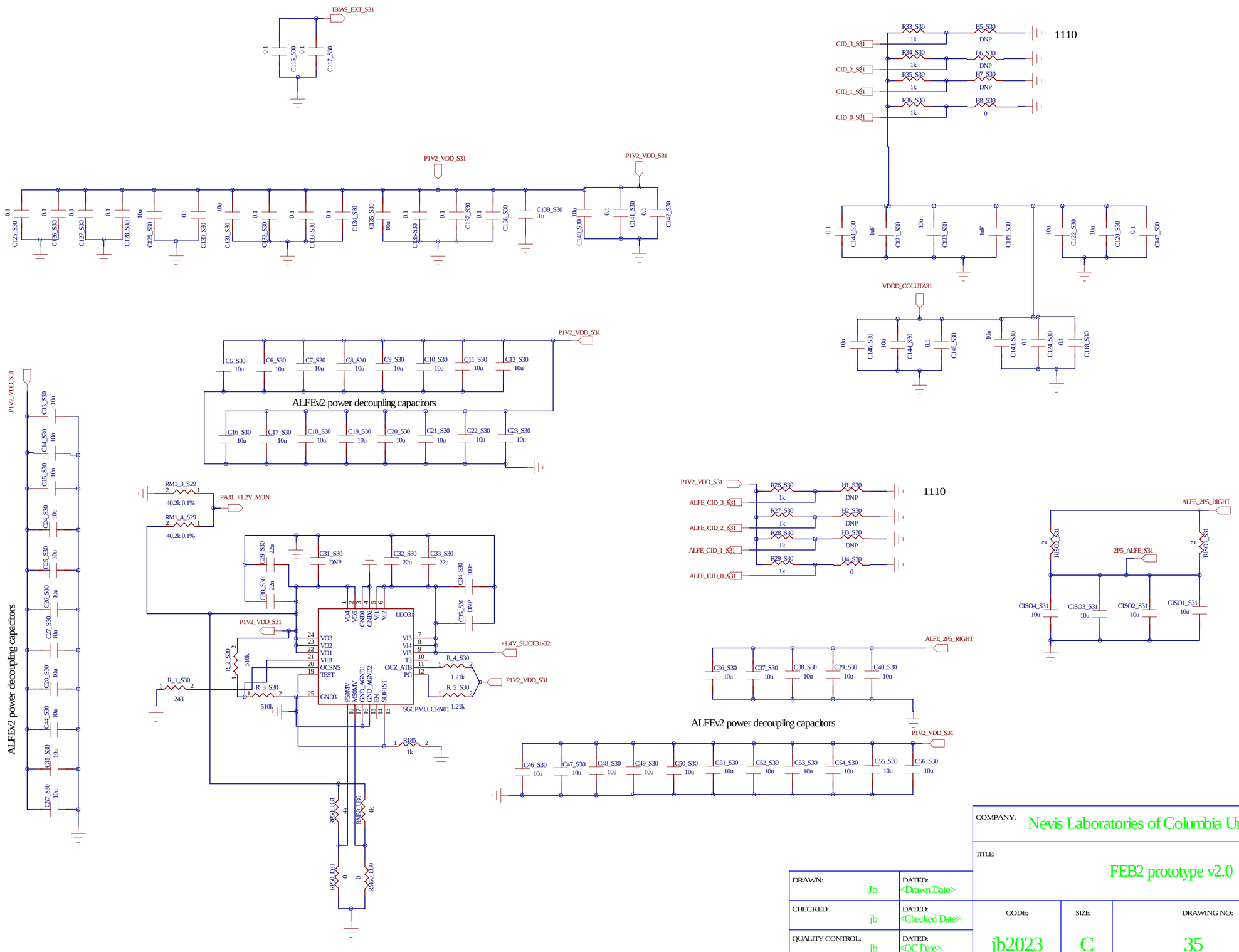

DRAWN: Jb	DATED: <Drawn Date>	COMPANY: Nevis Laboratories of Columbia University	
CHECKED: jb	DATED: <Checked Date>	TITLE: FEB2 prototype v2.0	
QUALITY CONTROL: jb	DATED: <QC Date>	CODE: jb2023	SIZE: C
RELEASED: jb	DATED: <Release Date>	DRAWING NO: 35	REV: v2.0
		SCALE: <Scale>	SHEET: 119 OF 155

REVISION RECORD			
LTR	ECO NO:	APPROVED:	DATE:

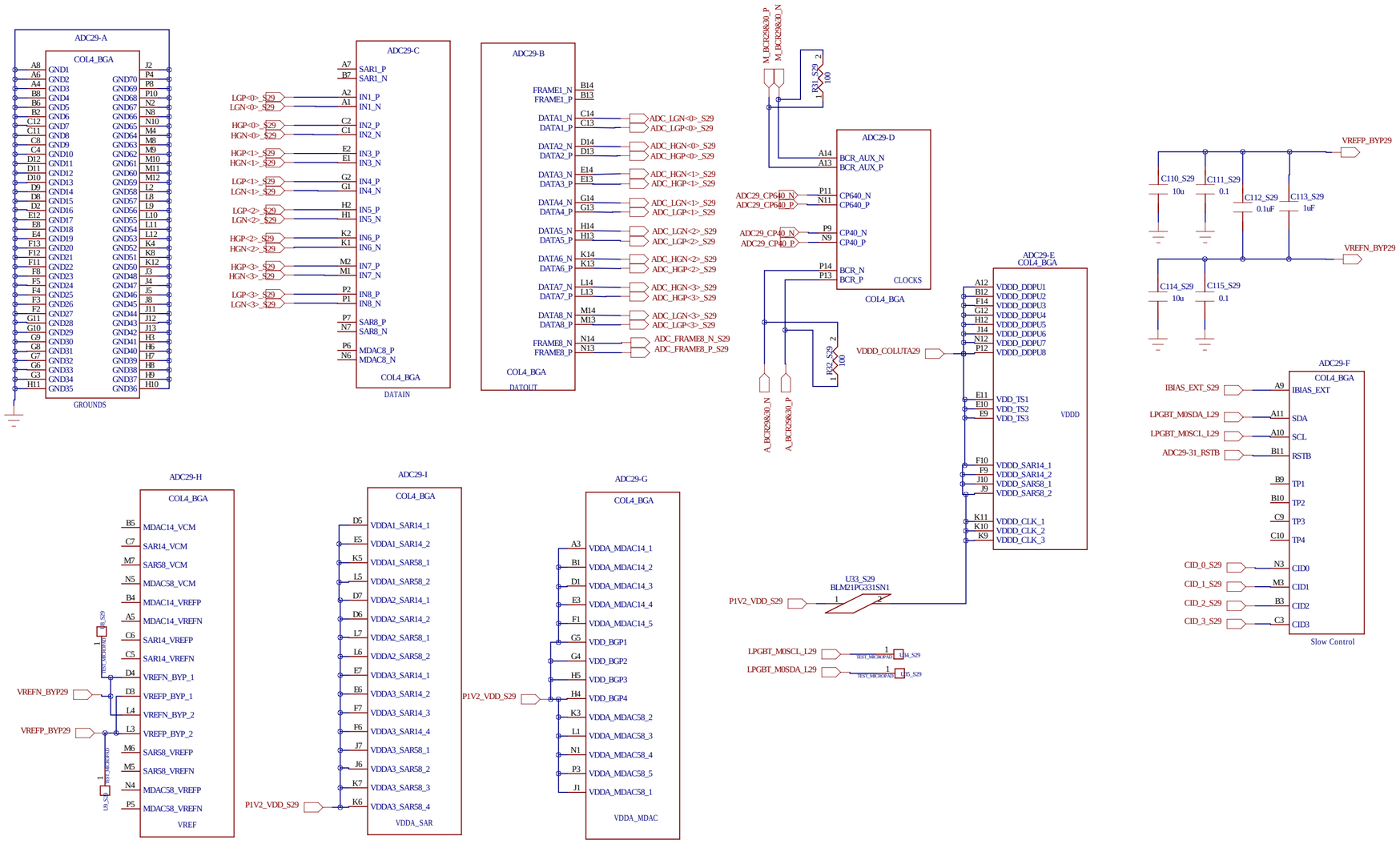

DRAWN: Jb	DATED: <Drawn Date>	COMPANY: Nevis Laboratories of Columbia University	
CHECKED: jb	DATED: <Checked Date>	TITLE: FEB2 prototype v2.0	
QUALITY CONTROL: jb	DATED: <QC Date>	CODE: jb2023	SIZE: C
RELEASED: jb	DATED: <Release Date>	DRAWING NO: 35	REV: v2.0
		SCALE: <Scale>	SHEET: 62 OF 155

REVISION RECORD			
LTR	ECO NO:	APPROVED:	DATE:

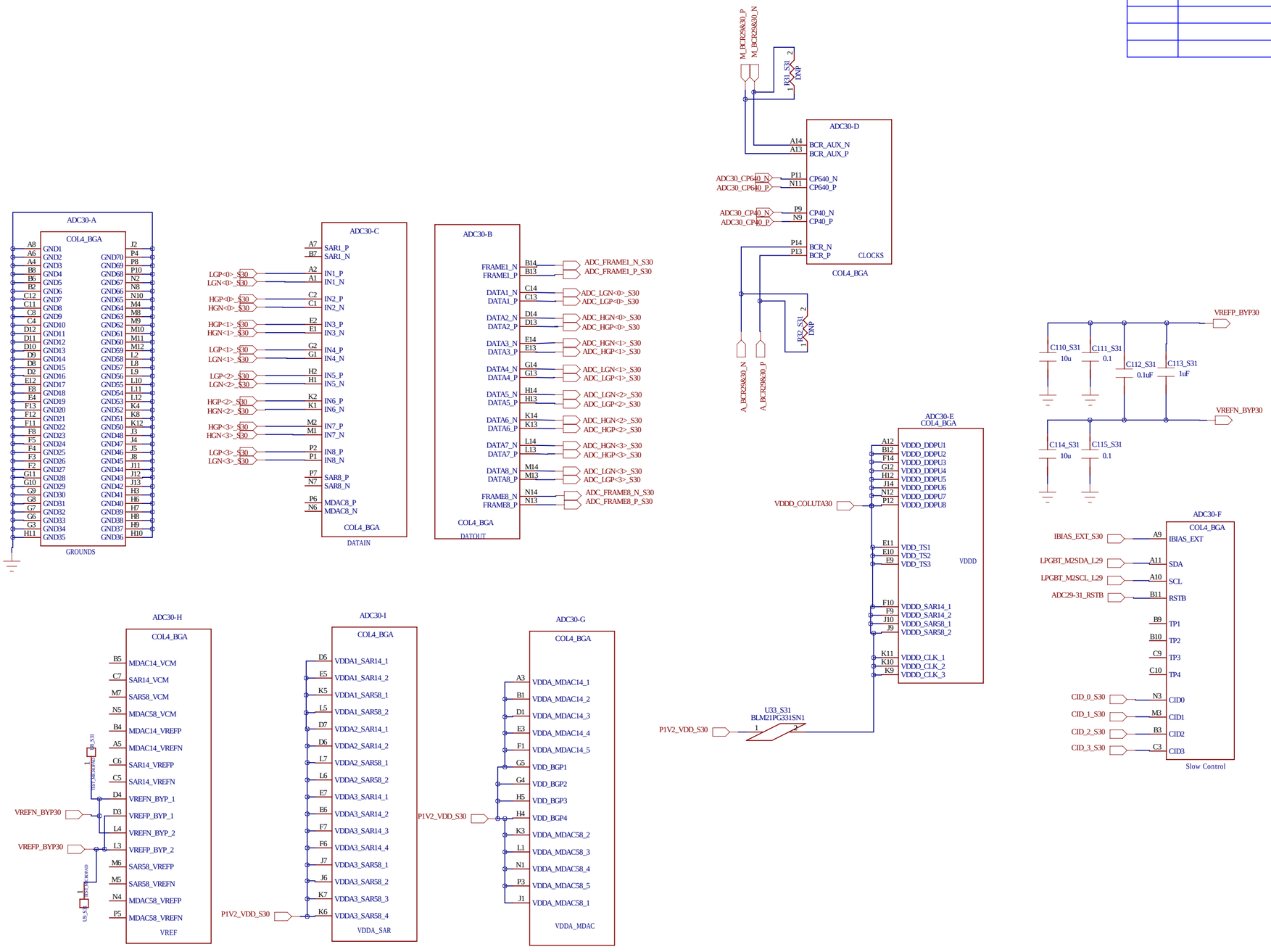

DRAWN: Jb	DATED: <Drawn Date>	COMPANY: Nevis Laboratories of Columbia University	
CHECKED: jb	DATED: <Checked Date>	TITLE: FEB2 prototype v2.0	
QUALITY CONTROL: jb	DATED: <QC Date>	CODE: jb2023 / SIZE: C / DRAWING NO: 35	REV: v2.0
RELEASED: jb	DATED: <Release Date>	SCALE: <Scale>	SHEET: 121 OF 155

REVISION RECORD			
LTR	ECO NO:	APPROVED:	DATE:

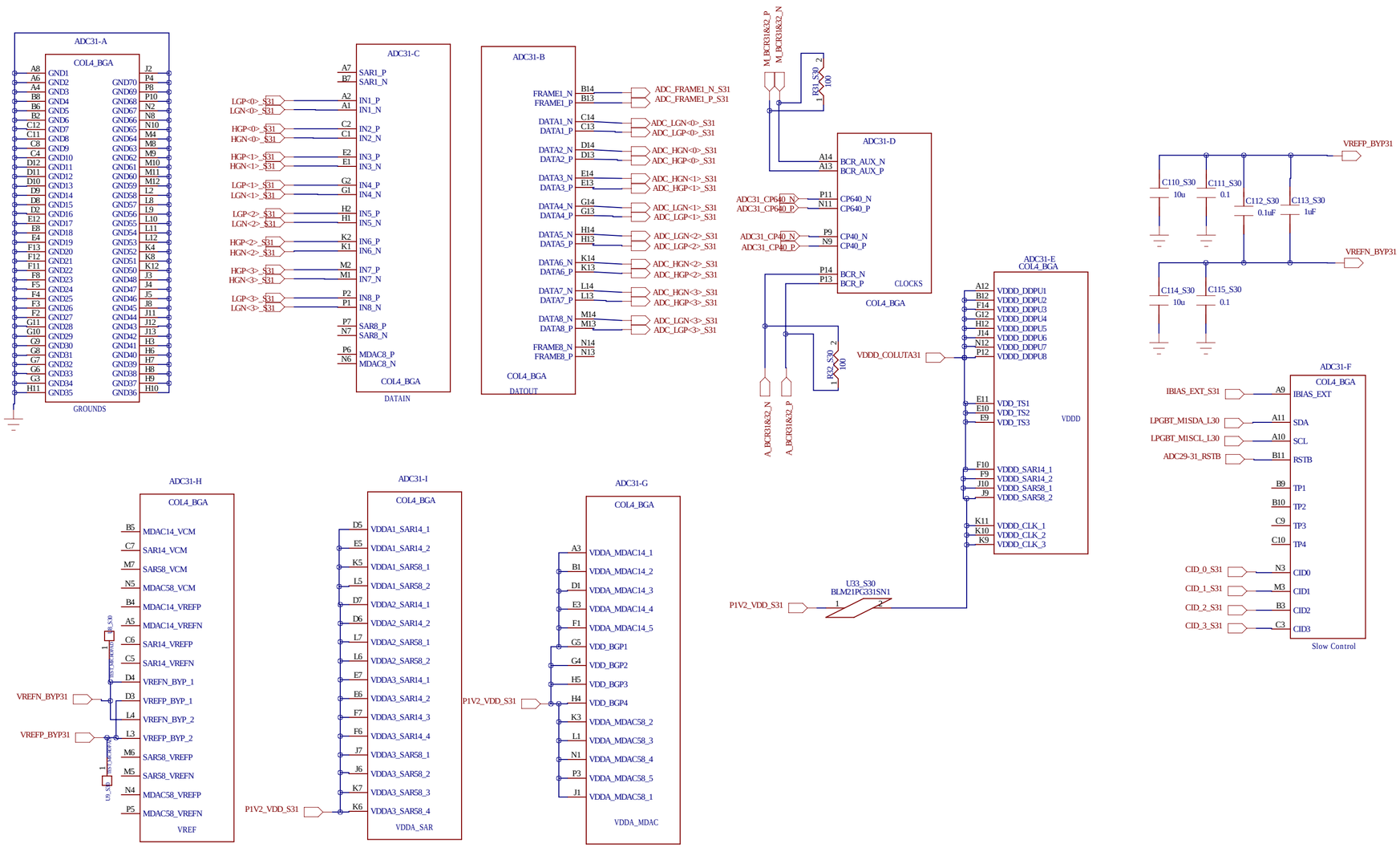

COMPANY: Nevis Laboratories of Columbia University				
TITLE: FEB2 prototype v2.0				
DRAWN: Jb	DATED: <Drawn Date>	CODE: jb2023	SIZE: C	DRAWING NO: 35 / REV: v2.0
CHECKED: jb	DATED: <Checked Date>			
QUALITY CONTROL: jb	DATED: <QC Date>			
RELEASED: jb	DATED: <Release Date>	SCALE: <Scale>		SHEET: 122 OF 155

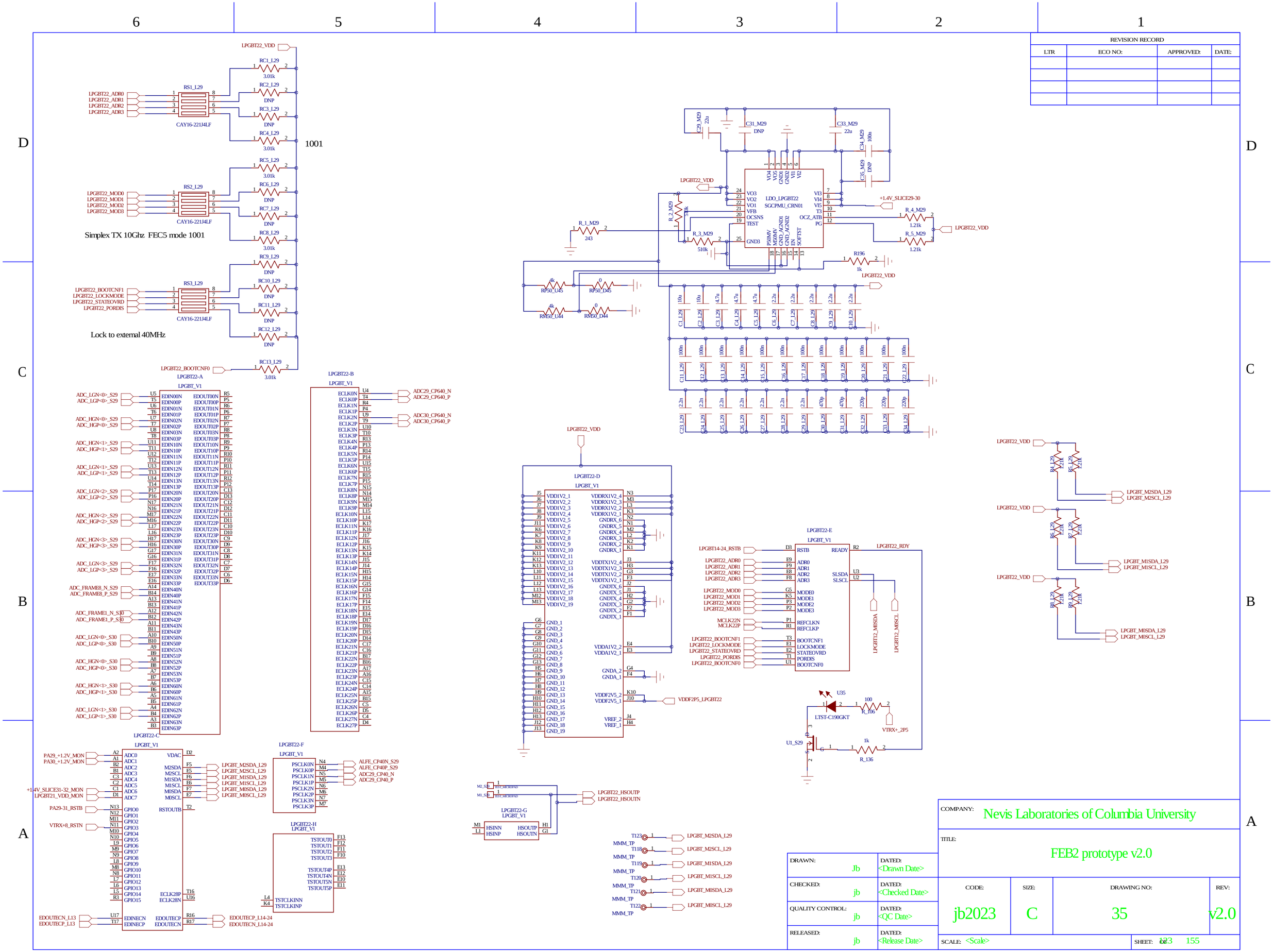
Simplex TX 10Ghz FEC5 mode 1001
Lock to external 40MHz
1001
LDO_LPGBT22
SGCPMU_CRN01
LPGBT_V1
LPGBT22-A
LPGBT22-B
LPGBT22-C
LPGBT22-D
LPGBT22-E
LPGBT22-F
LPGBT22-G
LPGBT22-H
LTST-C190GKT
REVISION RECORD
LTR
ECO NO:
APPROVED:
DATE:
COMPANY:
Nevis Laboratories of Columbia University
TITLE:
FEB2 prototype v2.0
DRAWN:
Jb
DATED:
<Drawn Date>
CHECKED:
jb
DATED:
<Checked Date>
QUALITY CONTROL:
jb
DATED:
<QC Date>
RELEASED:
jb
DATED:
<Release Date>
CODE:
jb2023
SIZE:
C
DRAWING NO:
35
REV:
v2.0
SCALE:
<Scale>
SHEET:
123
155

REVISION RECORD			
LTR	ECO NO:	APPROVED:	DATE:

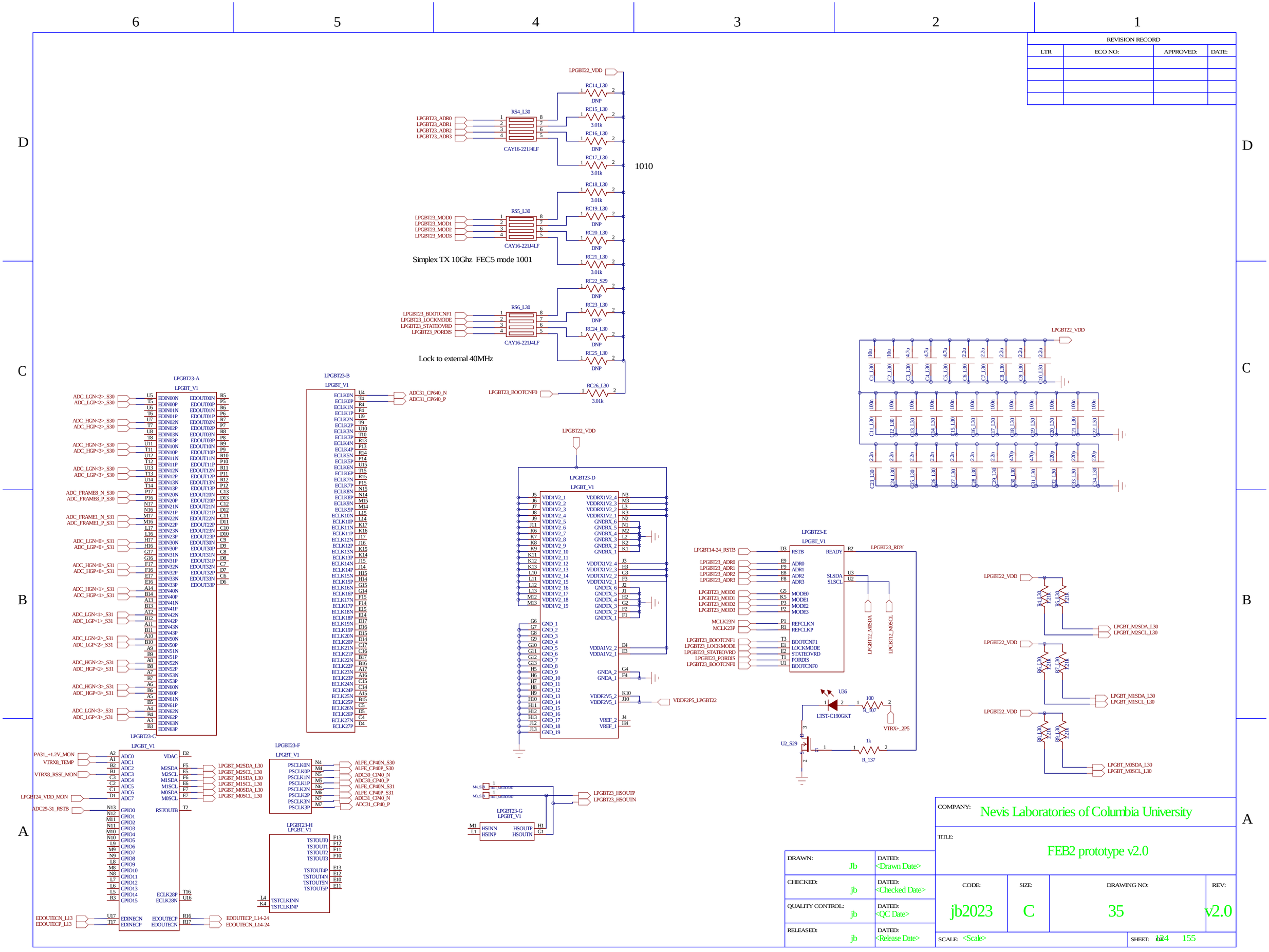

REVISION RECORD			
LTR	ECO NO:	APPROVED:	DATE:

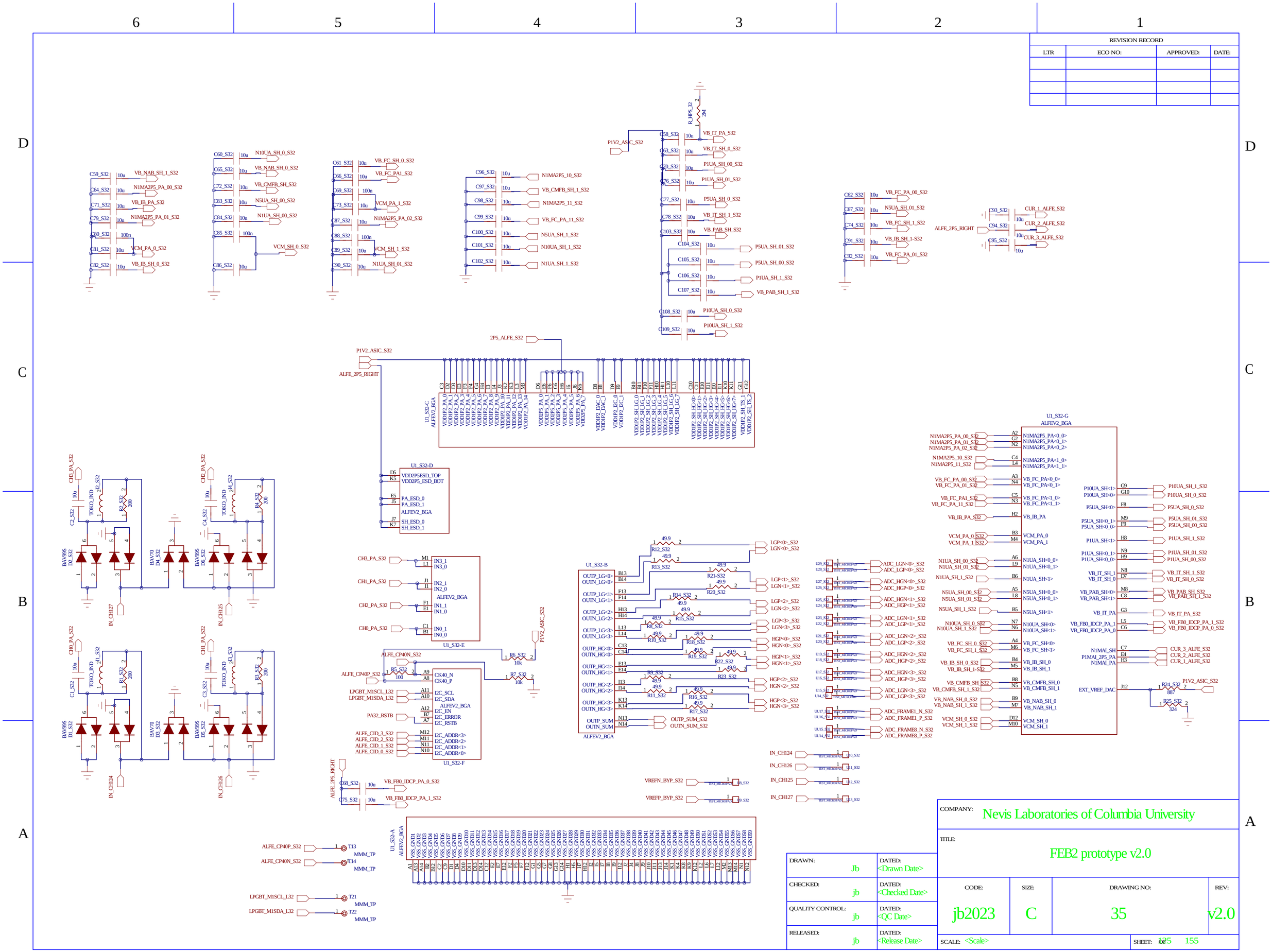

DRAWN: Jb	DATED: <Drawn Date>	COMPANY: Nevis Laboratories of Columbia University	
CHECKED: jb	DATED: <Checked Date>	TITLE: FEB2 prototype v2.0	
QUALITY CONTROL: jb	DATED: <QC Date>	CODE: jb2023	SIZE: C
RELEASED: jb	DATED: <Release Date>	DRAWING NO: 35	REV: v2.0
		SCALE: <Scale>	SHEET: 125 of 155

REVISION RECORD			
LTR	ECO NO:	APPROVED:	DATE:

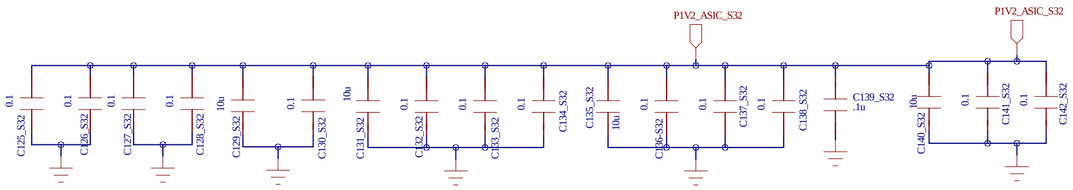

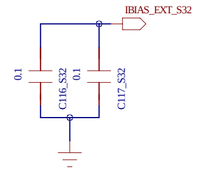

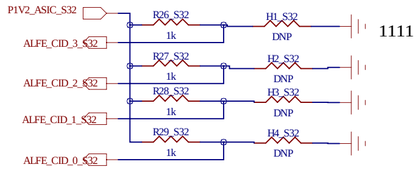

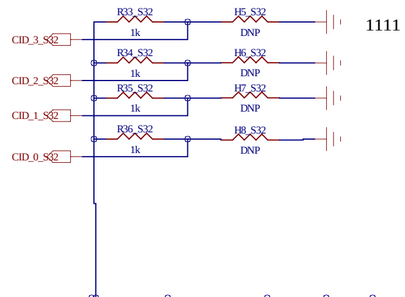

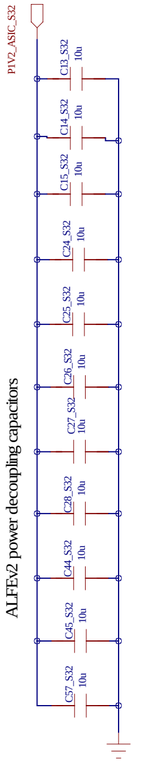

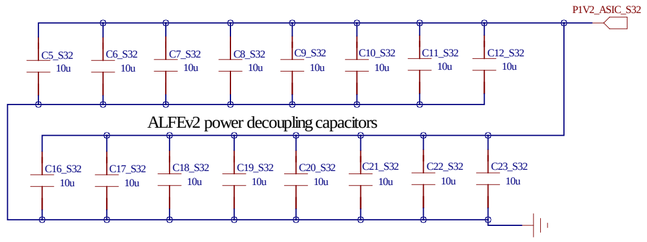

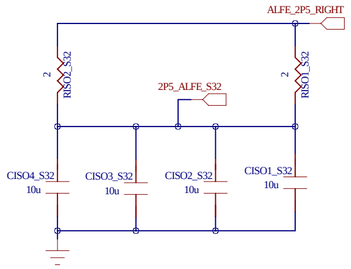

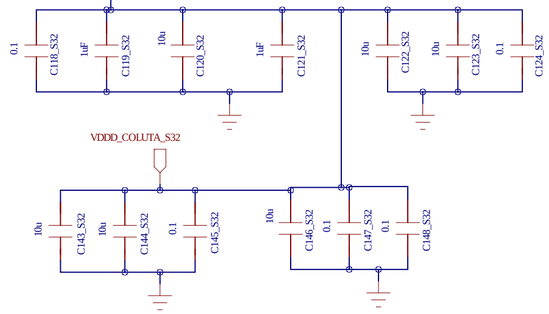

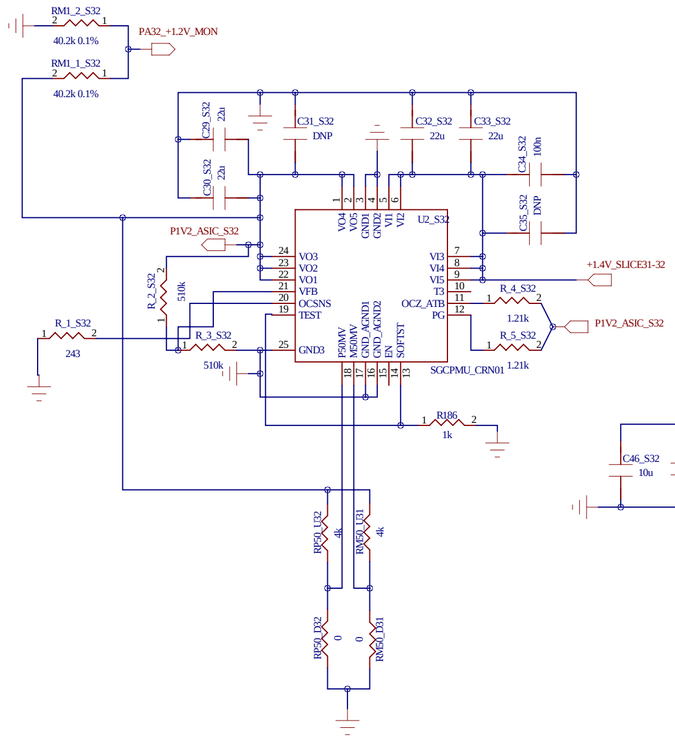

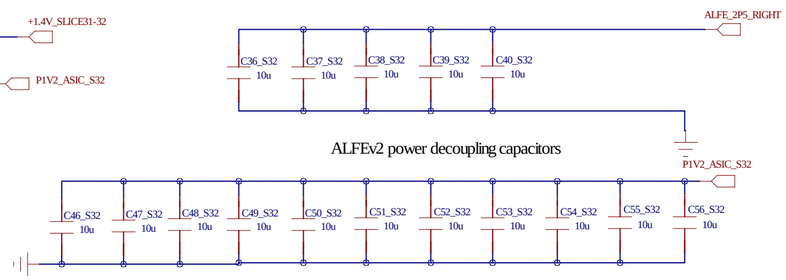

DRAWN: Jb	DATED: <Drawn Date>	COMPANY: Nevis Laboratories of Columbia University			
CHECKED: jb	DATED: <Checked Date>	TITLE: FEB2 prototype v2.0			
QUALITY CONTROL: jb	DATED: <QC Date>	CODE: jb2023	SIZE: C	DRAWING NO: 35	REV: v2.0
RELEASED: jb	DATED: <Release Date>	SCALE: <Scale>		SHEET: 126 OF 155	

REVISION RECORD			
LTR	ECO NO:	APPROVED:	DATE:

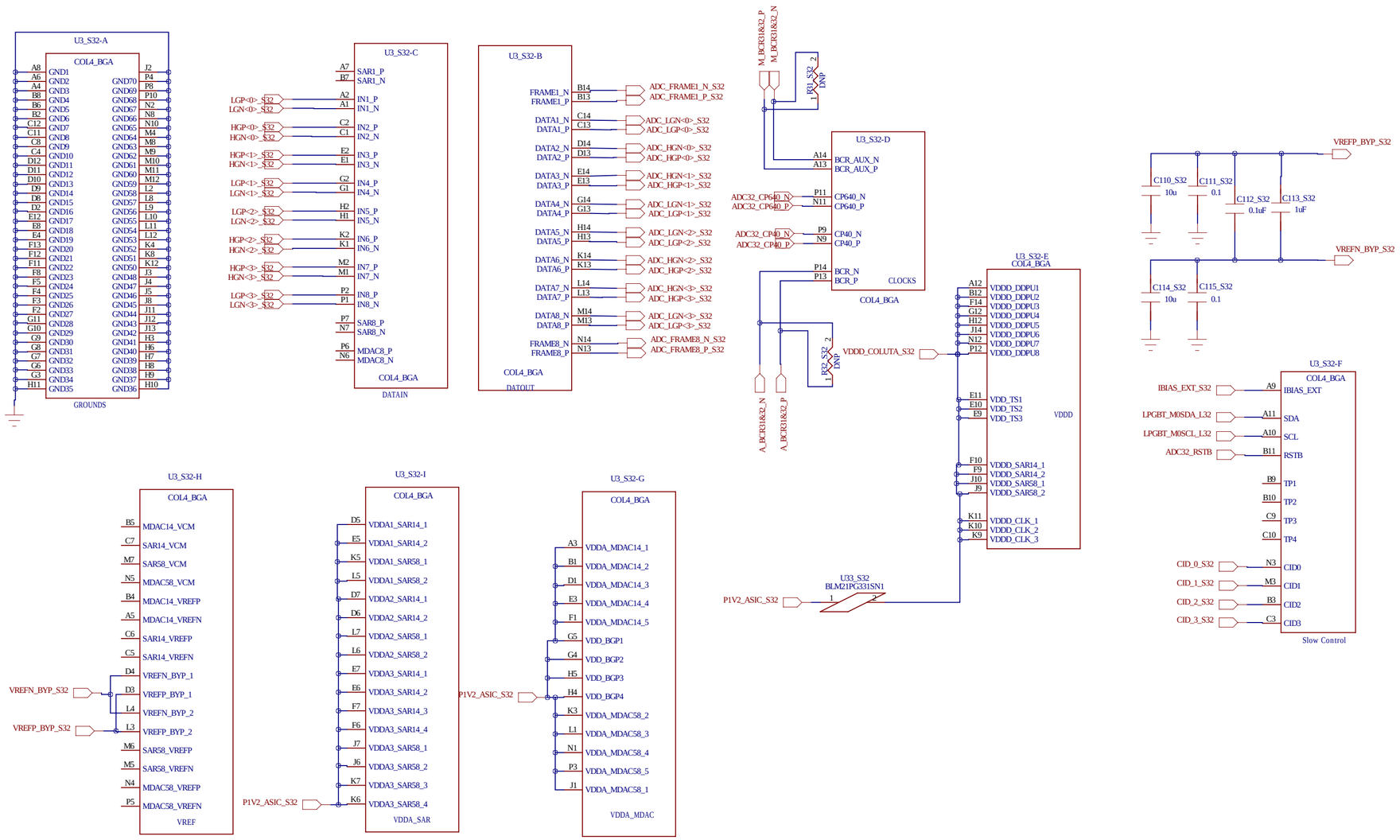

DRAWN: Jb	DATED: <Drawn Date>	COMPANY: Nevis Laboratories of Columbia University	
CHECKED: jb	DATED: <Checked Date>	TITLE: FEB2 prototype v2.0	
QUALITY CONTROL: jb	DATED: <QC Date>	CODE: jb2023	SIZE: C
RELEASED: jb	DATED: <Release Date>	DRAWING NO: 35	REV: v2.0
		SCALE: <Scale>	SHEET: 127 OF 155

REVISION RECORD			
LTR	ECO NO:	APPROVED:	DATE:

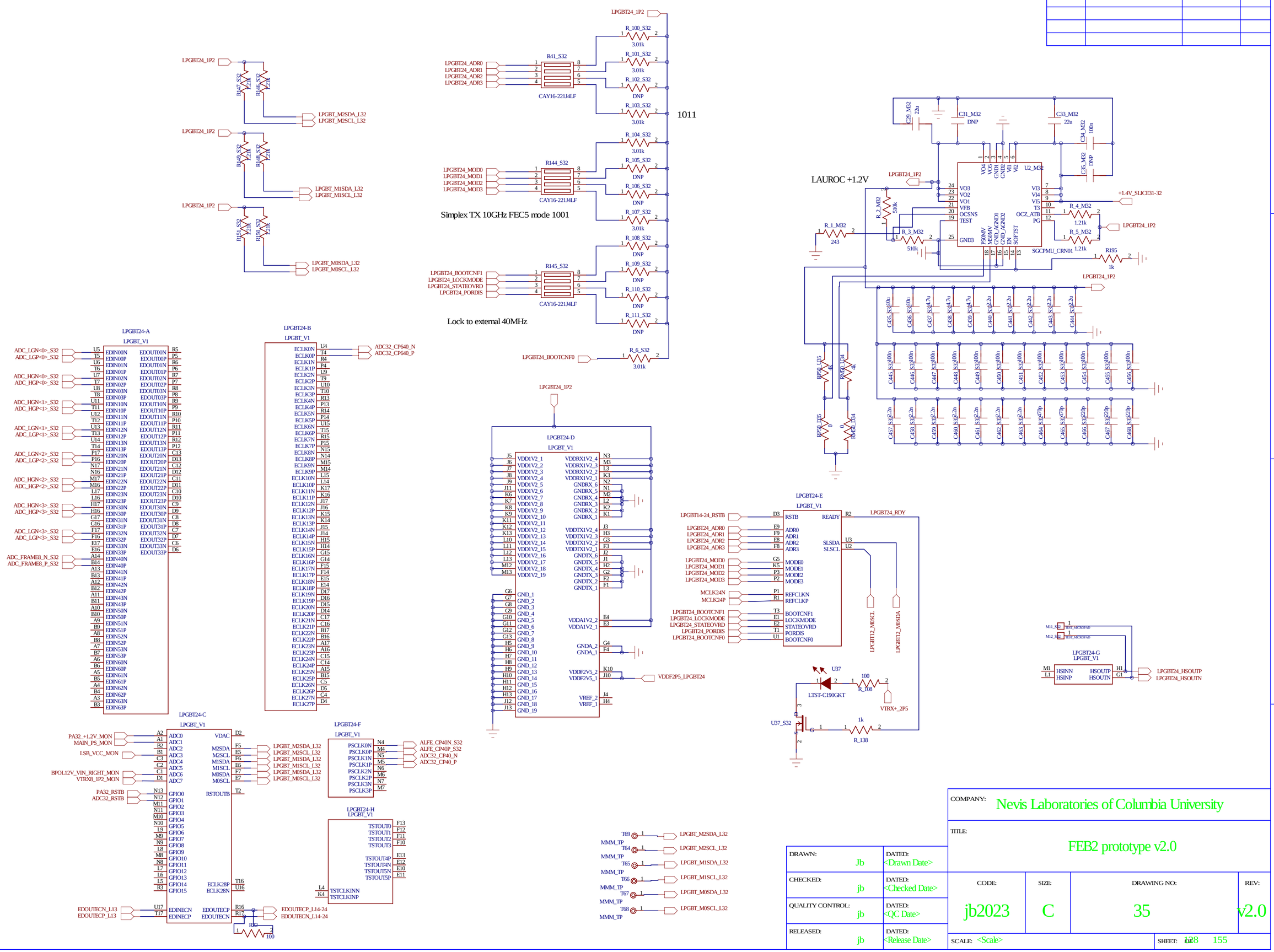

COMPANY: Nevis Laboratories of Columbia University			
TITLE: FEB2 prototype v2.0			
DRAWN: Jb	DATED: <Drawn Date>		
CHECKED: jb	DATED: <Checked Date>		
QUALITY CONTROL: jb	DATED: <QC Date>		
RELEASED: jb	DATED: <Release Date>		
CODE: jb2023	SIZE: C	DRAWING NO: 35	REV: v2.0
SCALE: <Scale>		SHEET: 128 OF 155	

REVISION RECORD			
LTR	ECO NO:	APPROVED:	DATE:

DRAWN: Jb	DATED: <Drawn Date>	COMPANY: Nevis Laboratories of Columbia University	
CHECKED: jb	DATED: <Checked Date>	TITLE: FEB2 prototype v2.0	
QUALITY CONTROL: jb	DATED: <QC Date>	CODE: jb2023 / SIZE: C / DRAWING NO: 35	REV: v2.0
RELEASED: jb	DATED: <Release Date>	SCALE: <Scale>	SHEET: 129 OF 155

REVISION RECORD			
LTR	ECO NO:	APPROVED:	DATE:

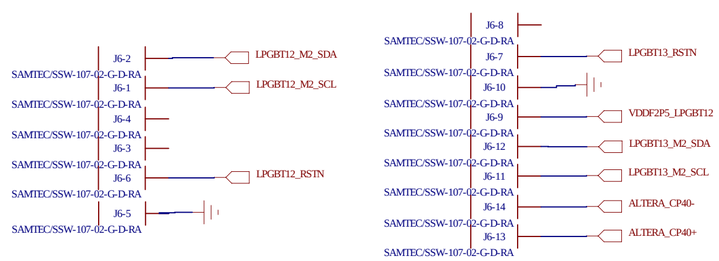

DRAWN: Jb	DATED: <Drawn Date>	COMPANY: Nevis Laboratories of Columbia University			
CHECKED: jb	DATED: <Checked Date>	TITLE: FEB2 prototype v2.0			
QUALITY CONTROL: jb	DATED: <QC Date>	CODE: jb2023	SIZE: C	DRAWING NO: 35	REV: v2.0
RELEASED: jb	DATED: <Release Date>	SCALE: <Scale>		SHEET: 130 155	

REVISION RECORD			
LTR	ECO NO:	APPROVED:	DATE:

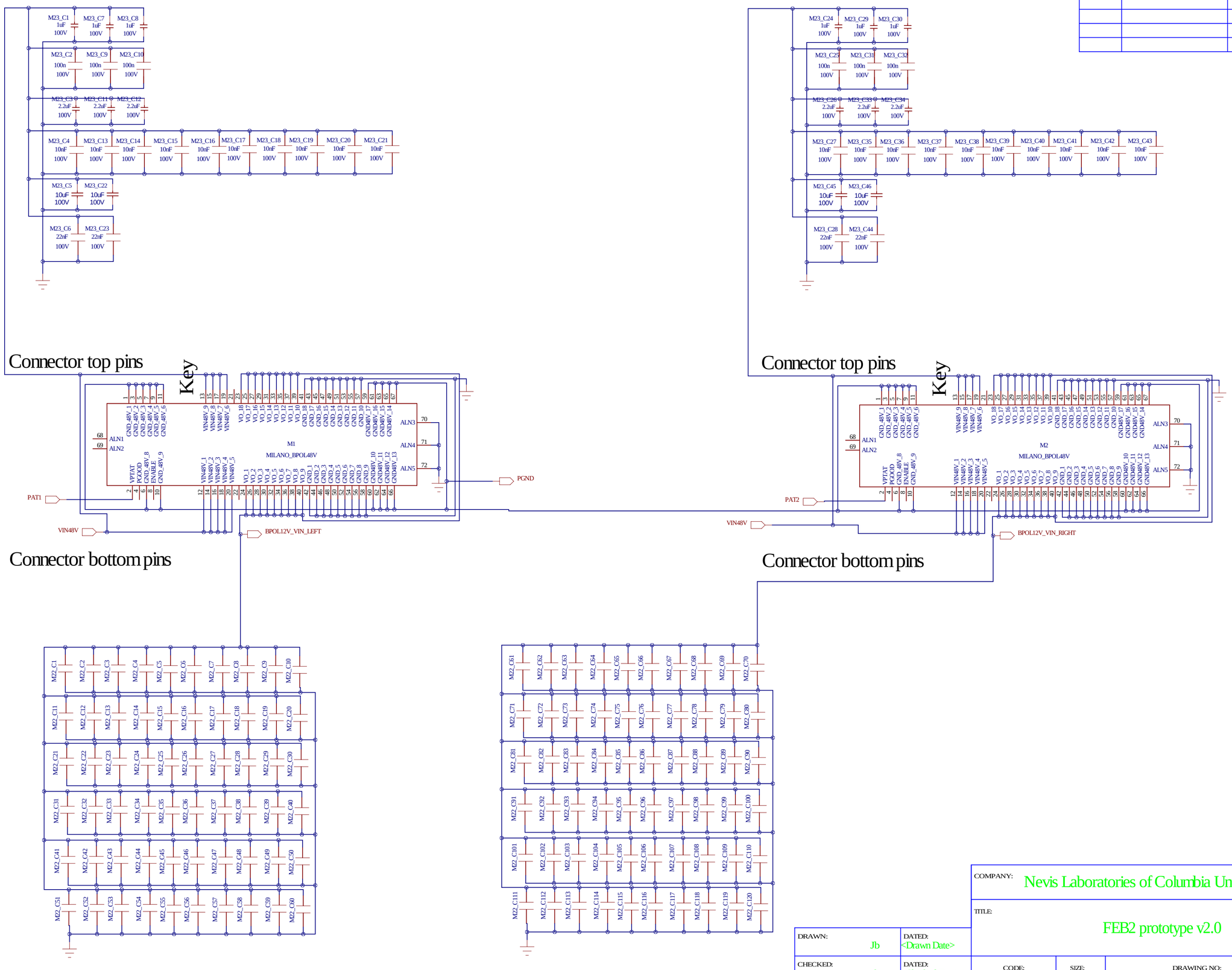

Output filters to be added separately. They are not part of bPOL12V reuse

60 caps 10N 0603/100V

CGA3E1C0G2A103J080AE

Output filters to be added separately. They are not part of bPOL12V reuse

60 caps 10N 0603/100V

CGA3E1C0G2A103J080AE

DRAWN: Jb	DATED: <Drawn Date>	COMPANY: Nevis Laboratories of Columbia University	
CHECKED: jb	DATED: <Checked Date>	TITLE: FEB2 prototype v2.0	
QUALITY CONTROL: jb	DATED: <QC Date>	CODE: jb2023	SIZE: C
RELEASED: jb	DATED: <Release Date>	DRAWING NO: 35	REV: v2.0
		SCALE: <Scale>	SHEET: 31 OF 155

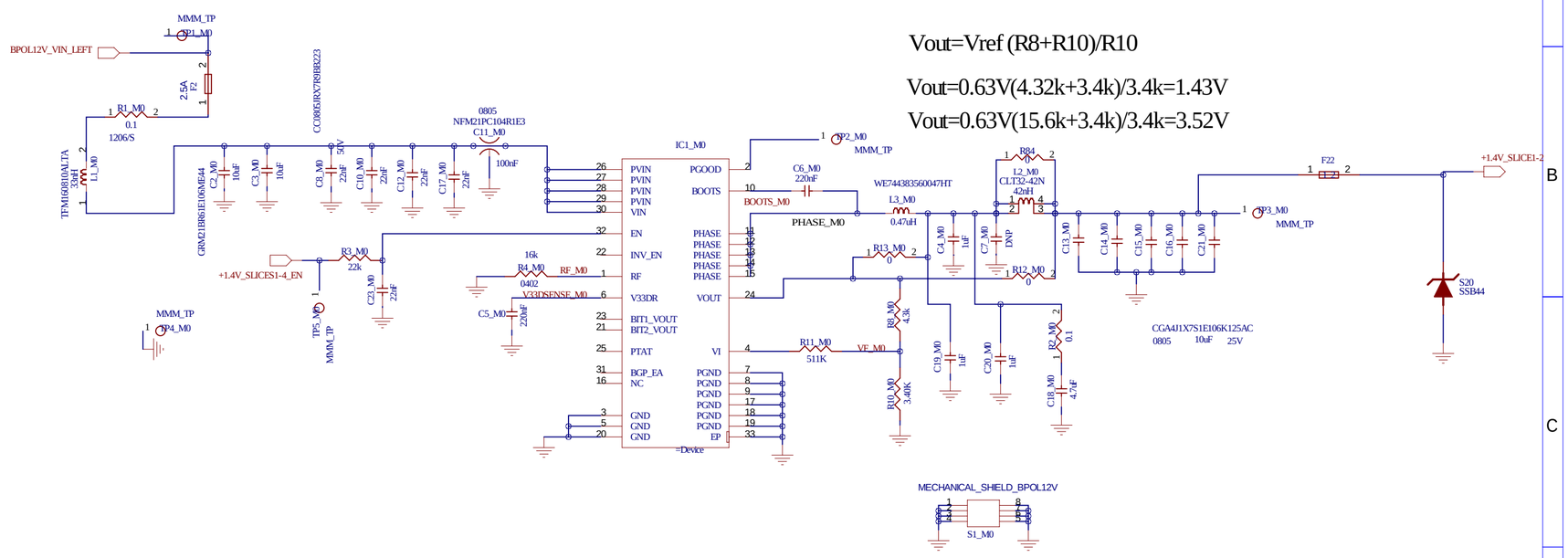

Vout=Vref (R8+R10)/R10

Vout=0.63V(4.32k+3.4k)/3.4k=1.43V

Vout=0.63V(15.6k+3.4k)/3.4k=3.52V

These HF caps are not part of bpol12 reuse but placed on a main FEB2 pcb

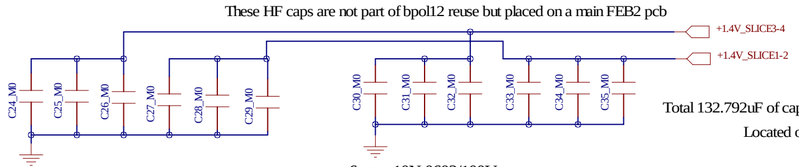

Total 132.792uF of capacitance at each bPOl12V module output

Located on a main FEB2 pcb

6 caps 22N 0603/100V

CGA3E2X7R2A223K080AE

6 caps 10N 0603/100V

CGA3E1C0G2A103J080AE

Project/Equipment -			
Document	***bPOL12V_MP =VariantName***	Designer P. Antoszczuk	
EP-ESE		Drawn byP. Antoszczuk	01/09/2021
		Check.by-	-
		Last Modz	-
		File	
		Print Date	
	European Organization for Nuclear Research CH-1211 Geneve 23 - Switzerland	EDA-04466-V1	Size A3 Rev -

Sheet 1 of 155

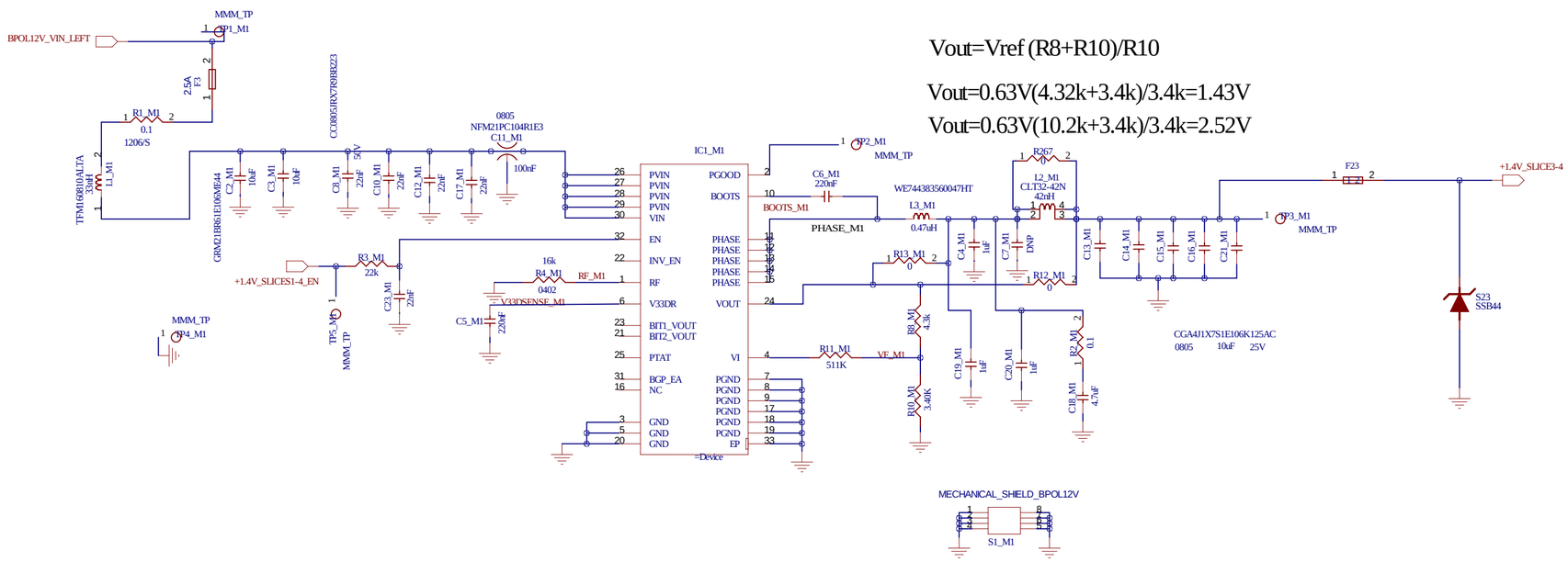

Project/Equipment	-
Document	EP-ESE
bPOL12V_MP =VariantName	
Designer	P. Antoszczuk
Drawn by	P. Antoszczuk 01/09/2021
Check.by	-
Last Modr	-
File	
Print Date	
Sheet	1 of 155
Size	A3
Rev	-

European Organization for Nuclear Research
CH-1211 Genève 23 - Switzerland

EDA-04466-V1

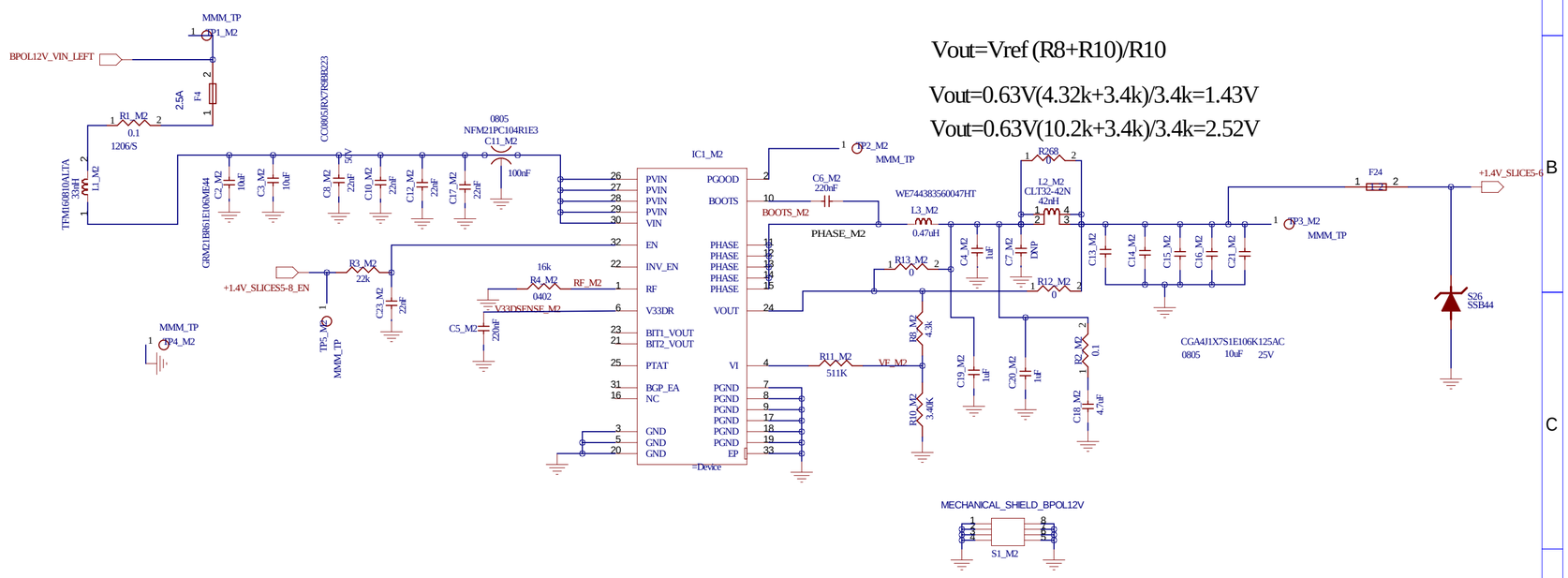

Vout=Vref (R8+R10)/R10

Vout=0.63V(4.32k+3.4k)/3.4k=1.43V

Vout=0.63V(10.2k+3.4k)/3.4k=2.52V

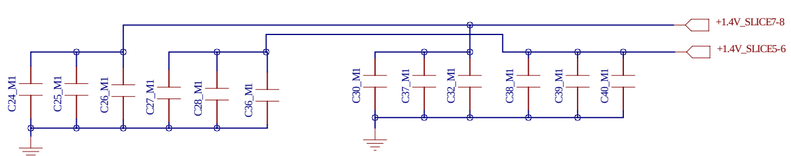

6 caps 22N 0603/100V

CGA3E2X7R2A223K080AE

6 caps 10N 0603/100V

CGA3E1C0G2A103J080AE

Project/Equipment -			
Document	bPOL12V_MP =VariantName	Designer P. Antoszczuk	
EP-ESE		Drawn by P. Antoszczuk	01/09/2021
		Check by -	
		Last Mod -	
		File	
		Print Date	
European Organization for Nuclear Research CH-1211 Genève 23 - Switzerland		EDA-04466-V1	Sheet 6 of 155 Size A3 Rev -

Vout=Vref (R8+R10)/R10

Vout=0.63V(4.32k+3.4k)/3.4k=1.43V

Vout=0.63V(10.2k+3.4k)/3.4k=2.52V

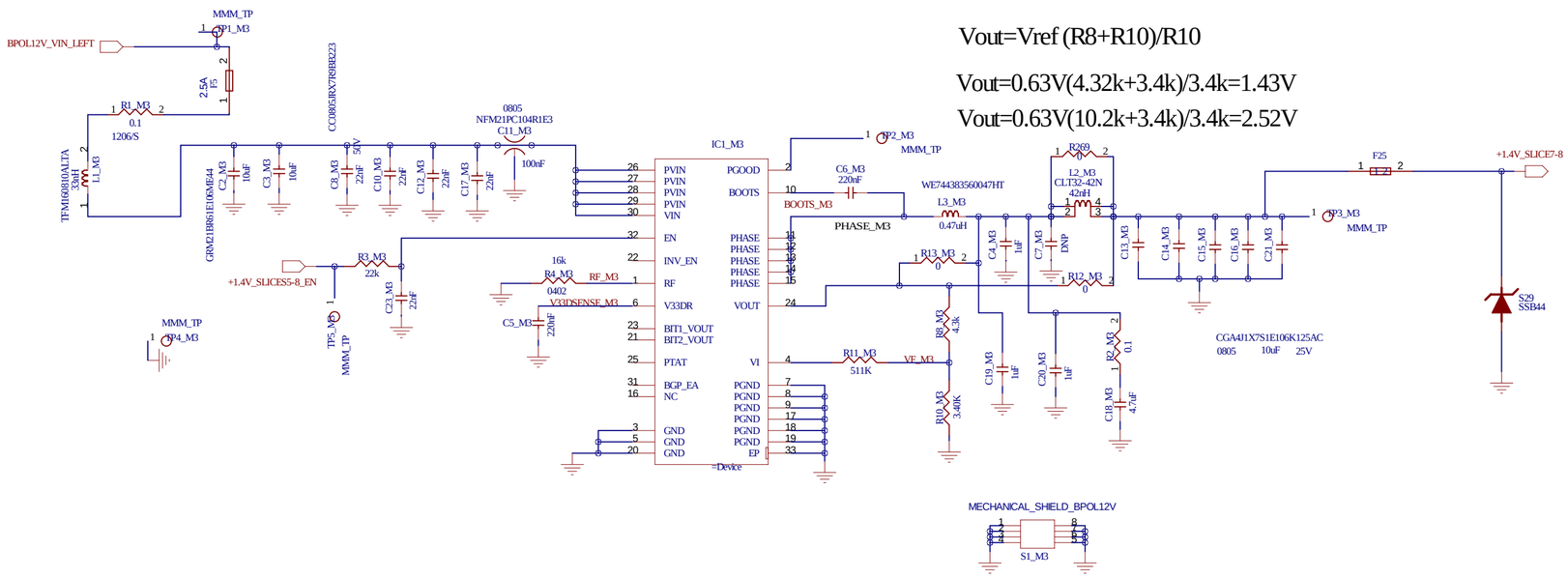

Project/Equipment	-		
Document	*bPOL12V_MP =VariantName*	Designer P. Antoszczuk	
EP-ESE		Drawn by P. Antoszczuk	01/09/2021
		Check by -	-
		Last Mod.	-
		File	
		Print Date	

European Organization for Nuclear Research
CH-1211 Genève 23 - Switzerland

EDA-04466-V1 A3 -

Sheet 6 of 155

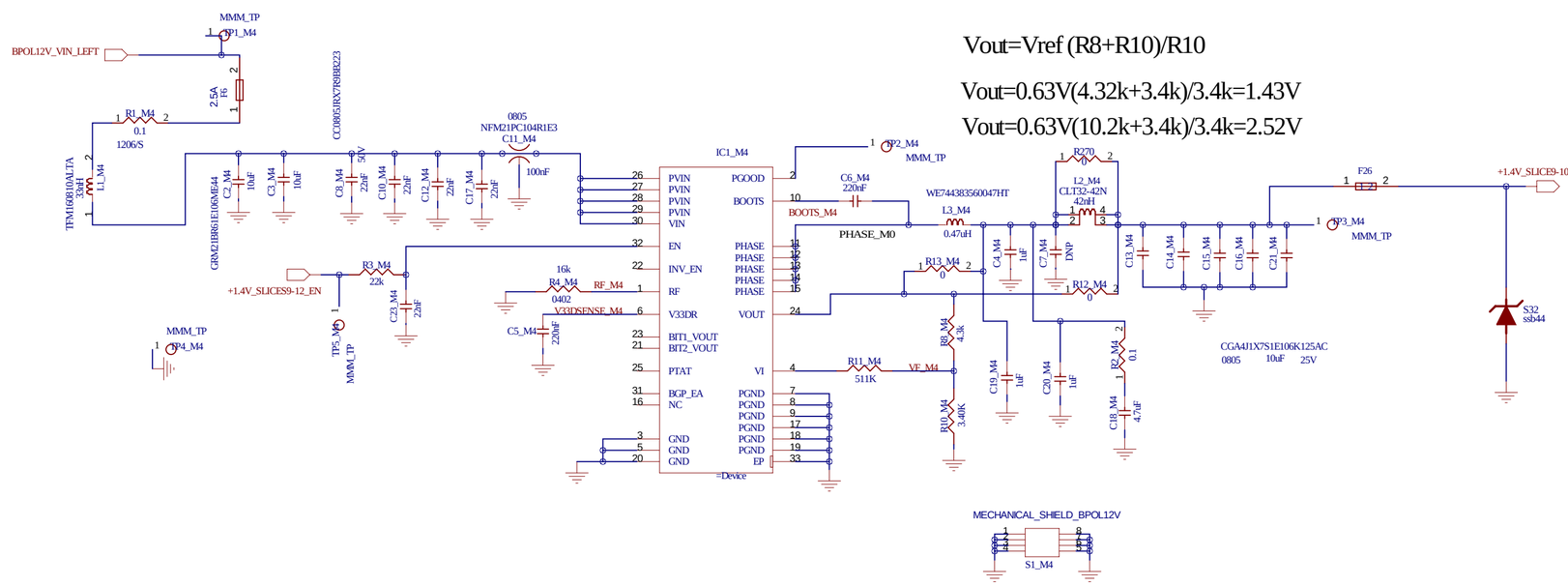

Vout=Vref (R8+R10)/R10

Vout=0.63V(4.32k+3.4k)/3.4k=1.43V

Vout=0.63V(10.2k+3.4k)/3.4k=2.52V

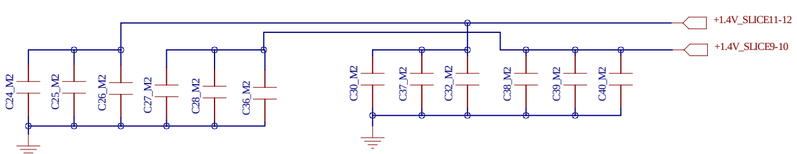

6 caps 22N 0603/100V
CGA3E2X7R2A223K080AE

6 caps 10N 0603/100V
CGA3E1C0G2A103J080AE

Project/Equipment -			
Document EP-ESE	bPOL12V_MP =VariantName	Designer P. Antoszczuk	
		Drawn by P. Antoszczuk	01/09/2021
		Check by -	-
		Last Mod -	-
		File	
		Print Date	
European Organization for Nuclear Research CH-1211 Genève 23 - Switzerland		EDA-04466-V1	Size A3 Rev -

Sheet 1 of 155

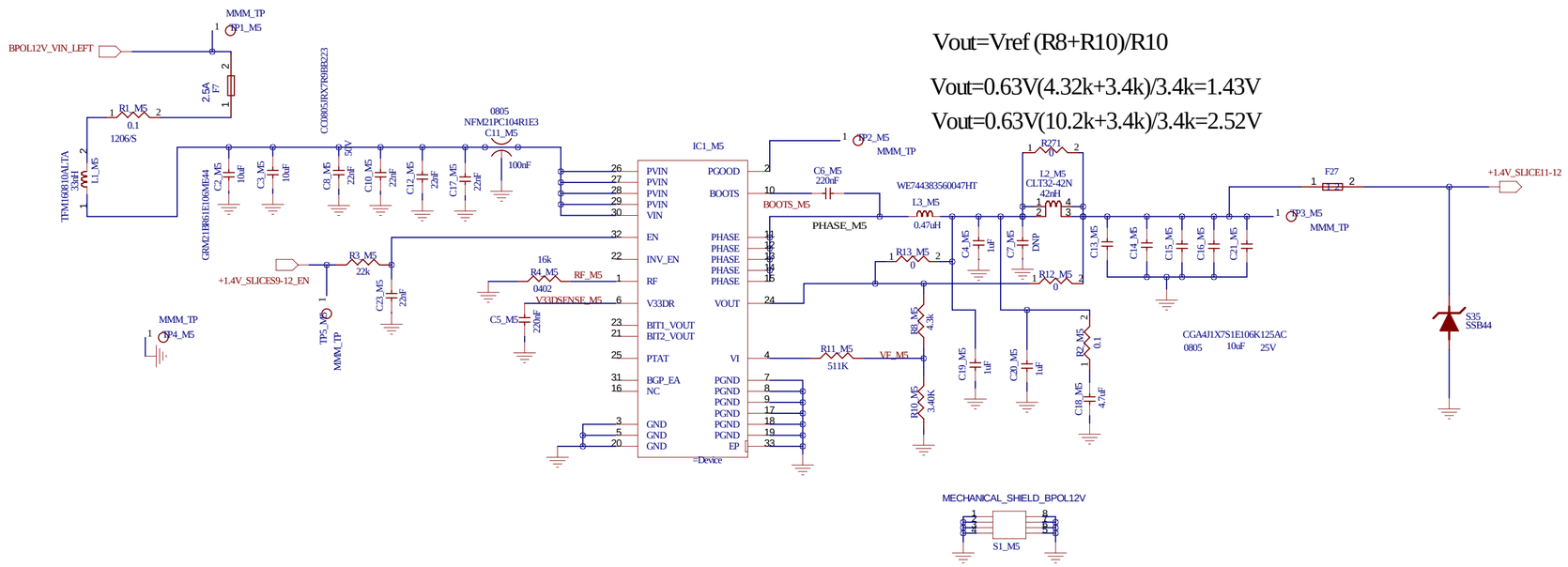

Project/Equipment	-
Document	EP-ESE
bPOL12V_MP =VariantName	
Designer	P. Antoszczuk
Drawn by	P. Antoszczuk 01/09/2021
Check by	-
Last Mod.	-
File	
Print Date	
Sheet	1 of 155
Size	A3
Rev	-
EDA-04466-V1	

European Organization for Nuclear Research
CH-1211 Genève 23 - Switzerland

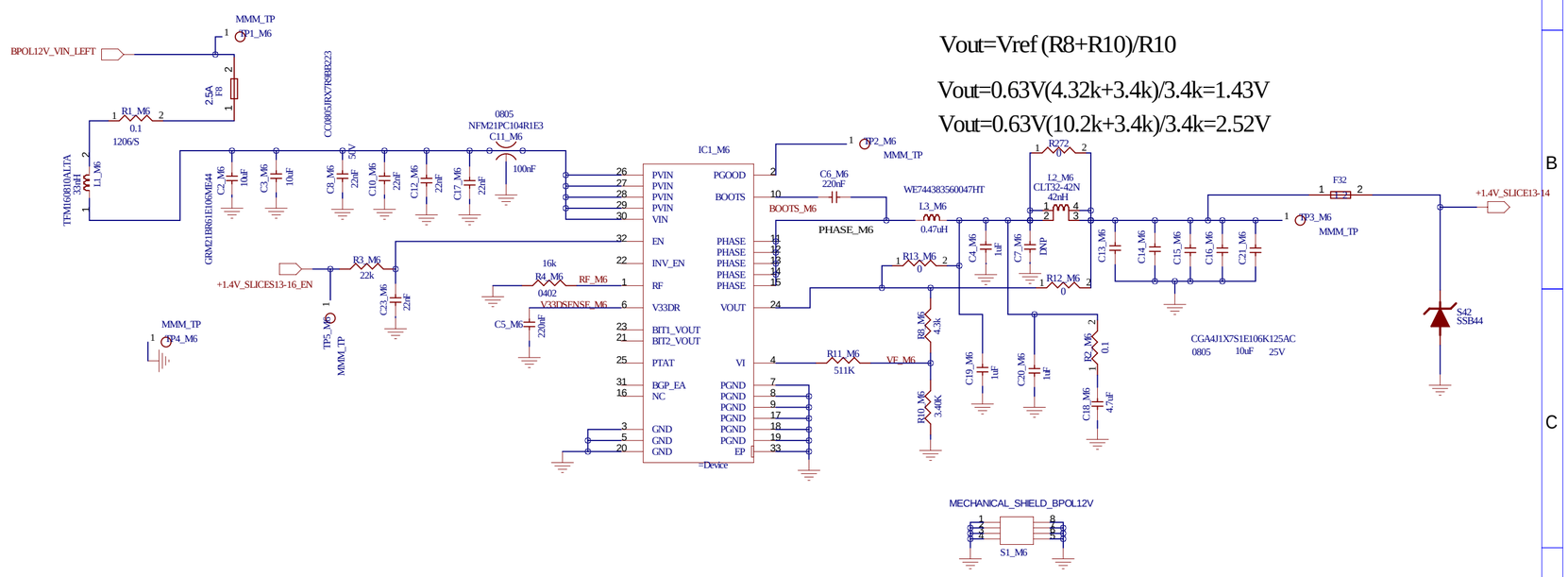

Vout=Vref (R8+R10)/R10

Vout=0.63V(4.32k+3.4k)/3.4k=1.43V

Vout=0.63V(10.2k+3.4k)/3.4k=2.52V

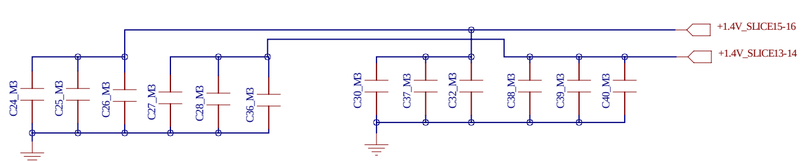

6 caps 22N 0603/100V

CGA3E2X7R2A223K080AE

6 caps 10N 0603/100V

CGA3E1C0G2A103J080AE

Project/Equipment -			
Document	bPOL12V_MP =VariantName	Designer P. Antoszczuk	
EP-ESE		Drawn by P. Antoszczuk	01/09/2021
		Check by -	
		Last Mod -	
		File	
		Print Date	
European Organization for Nuclear Research CH-1211 Genève 23 - Switzerland		EDA-04466-V1	Size A3 Rev -

Sheet 66 of 155

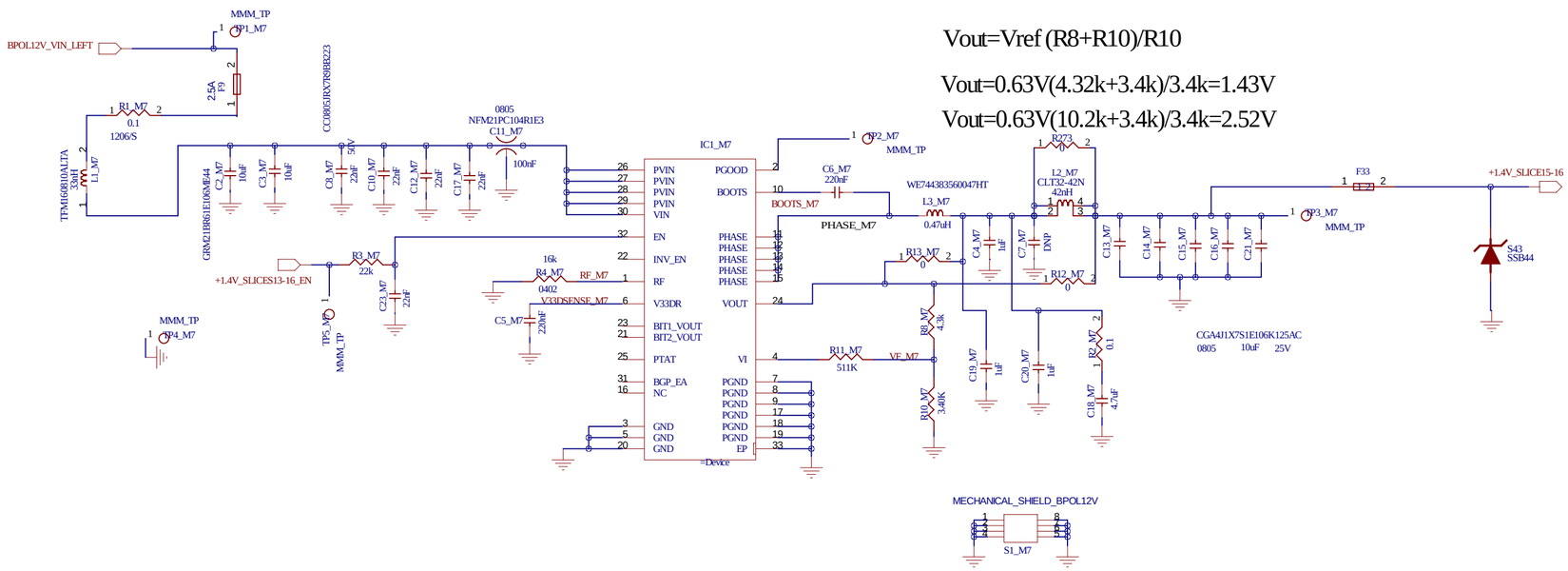

Vout=Vref (R8+R10)/R10

Vout=0.63V(4.32k+3.4k)/3.4k=1.43V

Vout=0.63V(10.2k+3.4k)/3.4k=2.52V

Project/Equipment -			
Document EP-ESE	***bPOL12V_MP =VariantName***	Designer P. Antoszczuk	
		Drawn by P. Antoszczuk	01/09/2021
		Check by -	-
		Last Mod -	-
		File	
		Print Date	
	European Organization for Nuclear Research CH-1211 Genève 23 - Switzerland	EDA-04466-V1	Size A3 Rev -

Sheet 1 of 155

Vout=Vref (R8+R10)/R10

Vout=0.63V(4.32k+3.4k)/3.4k=1.43V

Vout=0.63V(15.6k+3.4k)/3.4k=3.52V

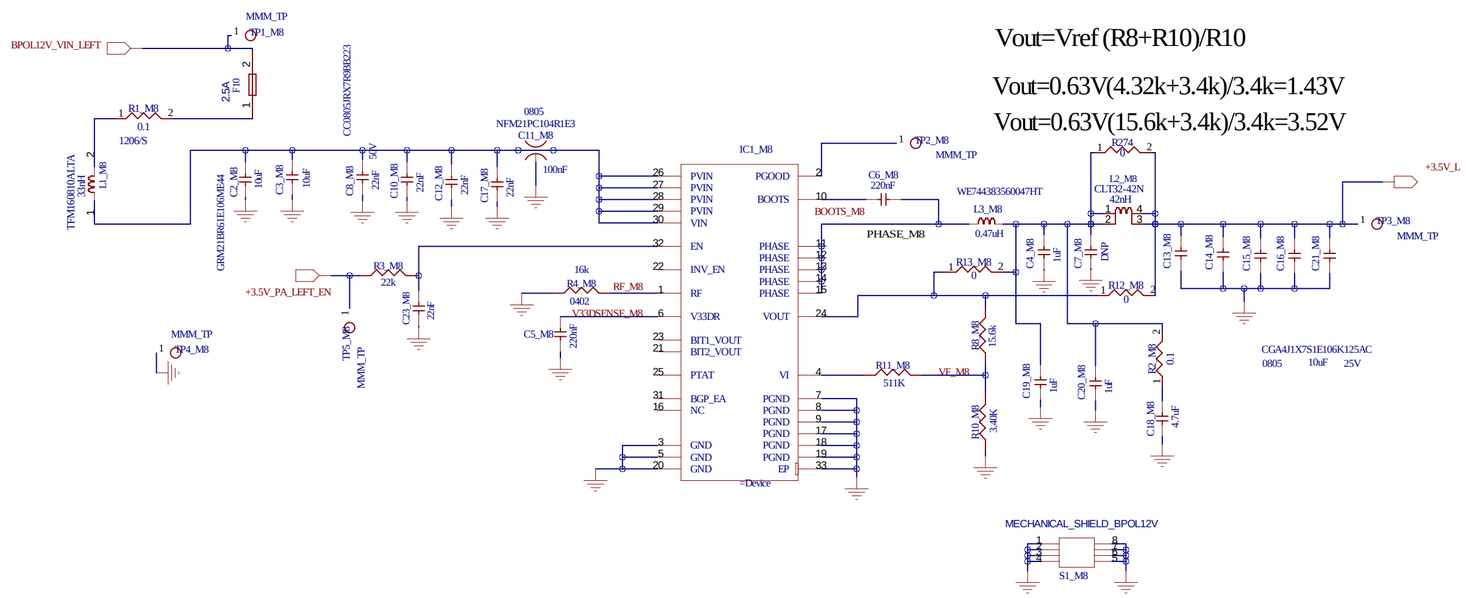

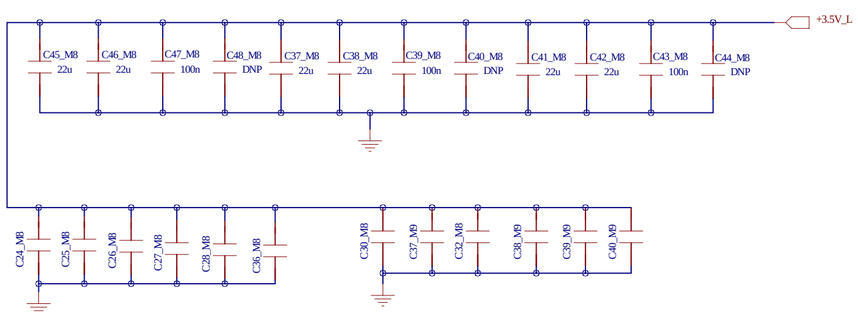

6 caps 22N 0603/100V

CGA3E2X7R2A223K080AE

6 caps 10N 0603/100V

CGA3E1C0G2A103J080AE

Project/Equipment -			
Document	bPOL12V_MP =VariantName	Designer P. Antoszczuk	
EP-ESE		Drawn by P. Antoszczuk	01/09/2021
		Check by -	
		Last Mod -	
		File	
		Print Date	
	European Organization for Nuclear Research CH-1211 Genève 23 - Switzerland	EDA-04466-V1	A3 -

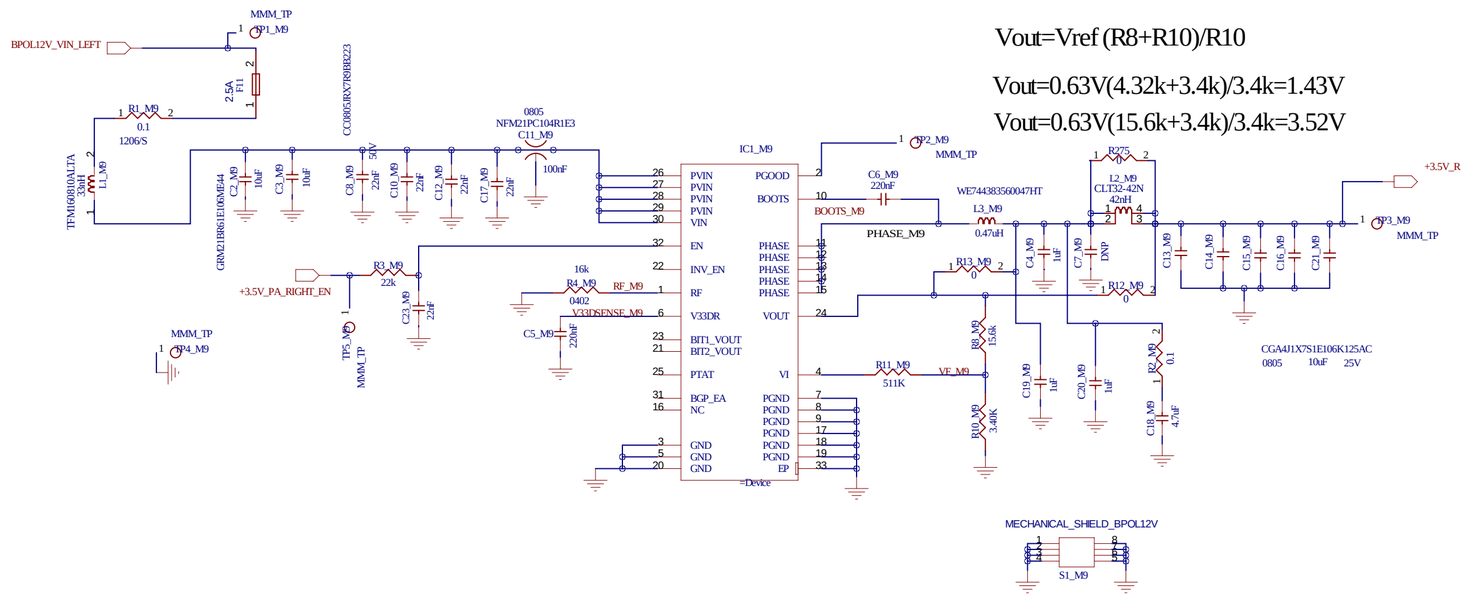

Vout=Vref (R8+R10)/R10

Vout=0.63V(4.32k+3.4k)/3.4k=1.43V

Vout=0.63V(15.6k+3.4k)/3.4k=3.52V

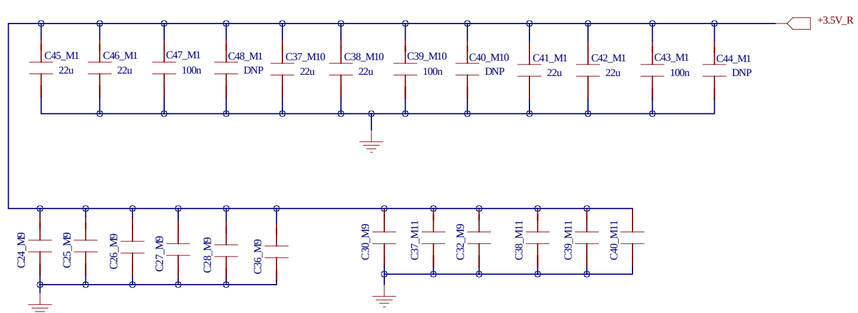

6 caps 22N 0603/100V

CGA3E2X7R2A223K080AE

6 caps 10N 0603/100V

CGA3E1C0G2A103J080AE

Project/Equipment -			
Document	bPOL12V_MP =VariantName	Designer P. Antoszczuk	
EP-ESE		Drawn by P. Antoszczuk	01/09/2021
		Check by -	
		Last Modr -	
		File	
		Print Date	
European Organization for Nuclear Research CH-1211 Genève 23 - Switzerland		EDA-04466-V1	Sheet 1 of 155 Size A3 Rev -

Vout=Vref (R8+R10)/R10

Vout=0.63V(4.32k+3.4k)/3.4k=1.43V

Vout=0.63V(15.6k+3.4k)/3.4k=3.52V

Vout=0.63V(10.2k+3.4k)/3.4k=2.52V

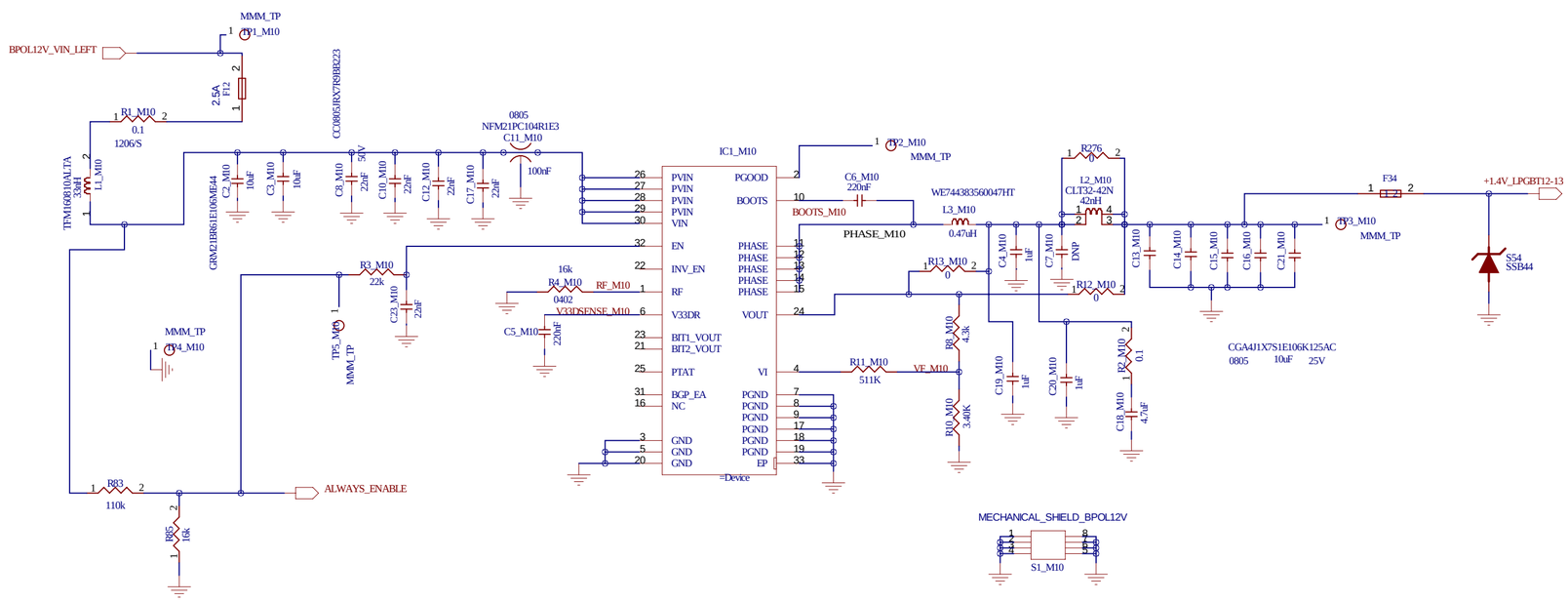

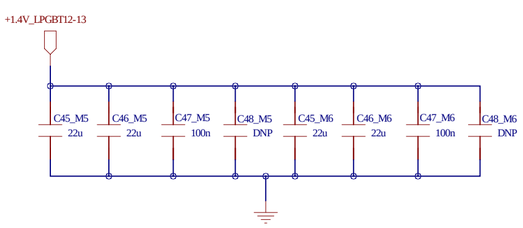

Project/Equipment -			
Document EP-ESE	bPOL12V_MP =VariantName	Designer P. Antoszczuk	
		Drawn by P. Antoszczuk	01/09/2021
		Check by -	
		Last Mod -	
		File	
		Print Date	
European Organization for Nuclear Research CH-1211 Genève 23 - Switzerland		EDA-04466-V1	Size A3 Rev -

Vout=Vref (R8+R10)/R10

Vout=0.63V(4.32k+3.4k)/3.4k=1.43V

Vout=0.63V(15.6k+3.4k)/3.4k=3.52V

Vout=0.63V(10.2k+3.4k)/3.4k=2.52V

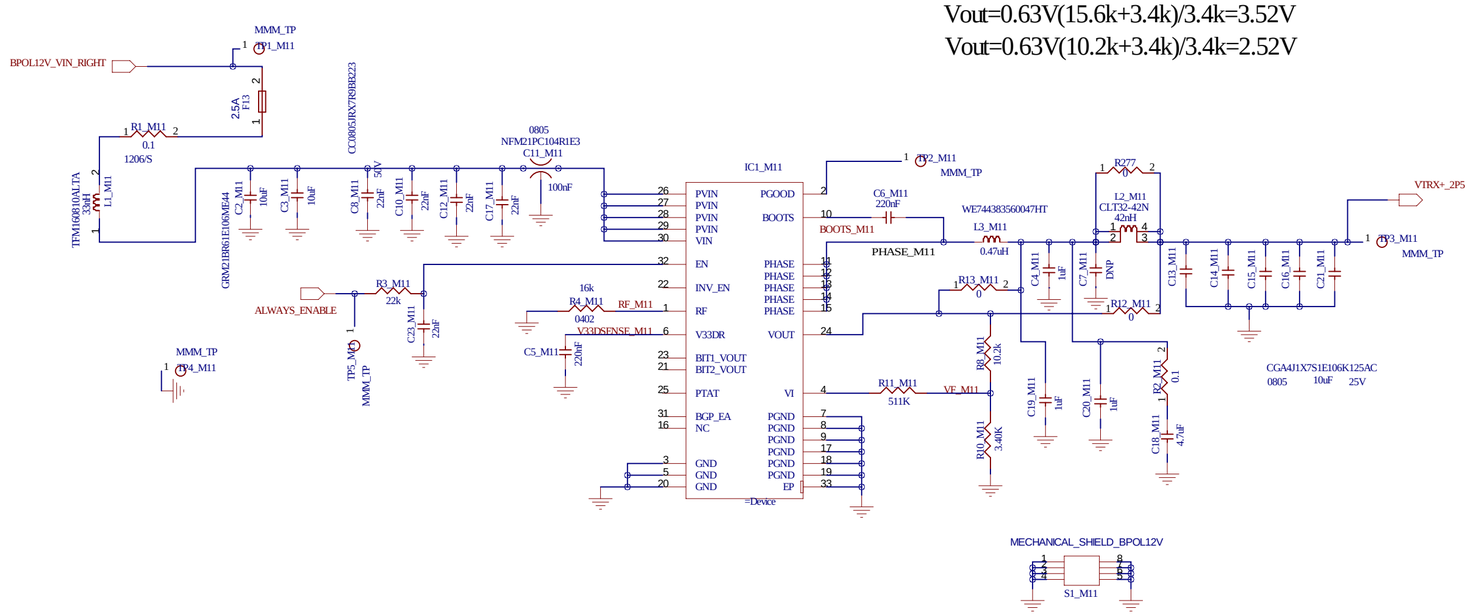

Project/Equipment -			
Document EP-ESE	bPOL12V_MP =VariantName	Designer P. Antoszczuk	
		Drawn by P. Antoszczuk	01/09/2021
		Check by -	
		Last Mod -	
		File	
		Print Date	
European Organization for Nuclear Research CH-1211 Genève 23 - Switzerland		EDA-04466-V1	Sheet 6 of 155 Size A3 Rev -

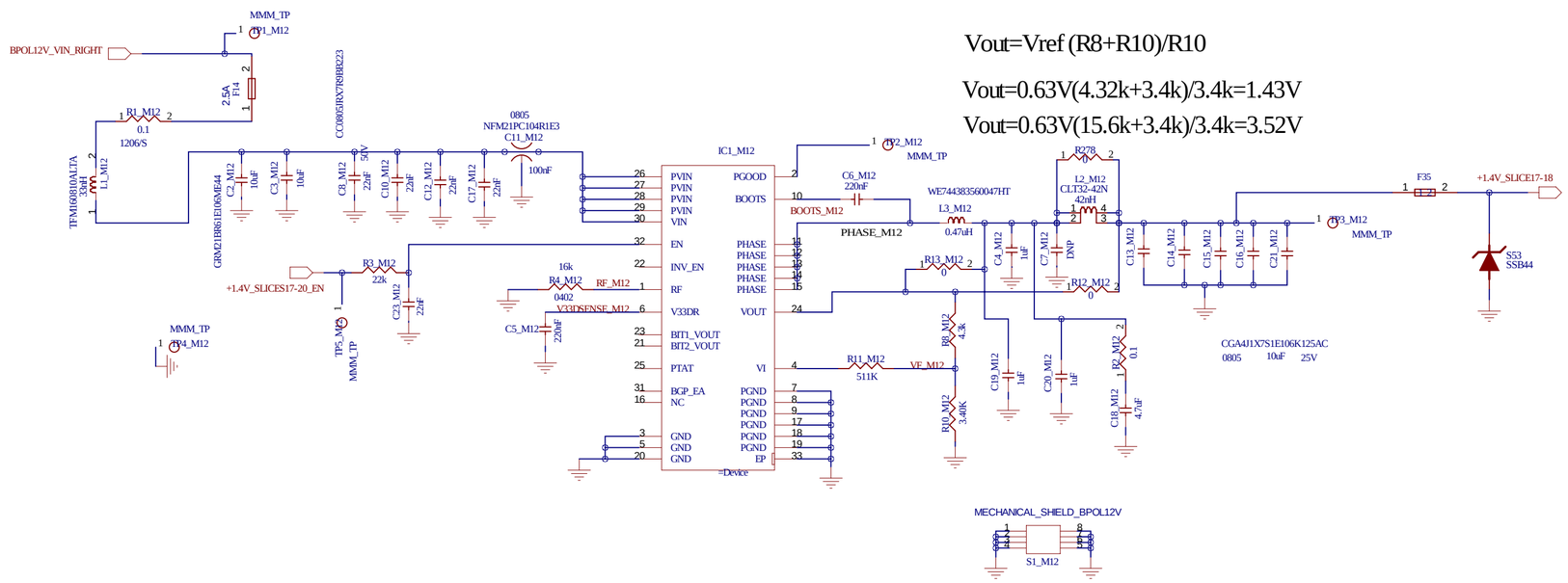

Vout=Vref (R8+R10)/R10

Vout=0.63V(4.32k+3.4k)/3.4k=1.43V

Vout=0.63V(15.6k+3.4k)/3.4k=3.52V

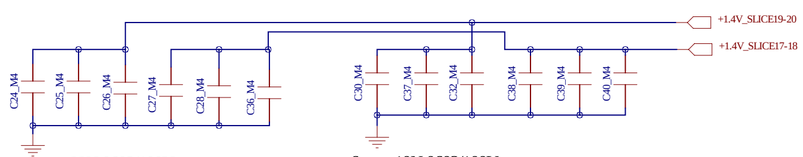

6 caps 22N 0603/100V

CGA3E2X7R2A223K080AE

6 caps 10N 0603/100V

CGA3E1C0G2A103J080AE

Project/Equipment	-		
Document	***bPOL12V_MP =VariantName***	Designer P. Antoszczuk	
EP-ESE		Drawn by P. Antoszczuk	01/09/2021
		Check by -	-
		Last Mod -	-
		File	
		Print Date	
European Organization for Nuclear Research CH-1211 Genève 23 - Switzerland		EDA-04466-V1	Size A3 Rev -

Sheet 6 of 155

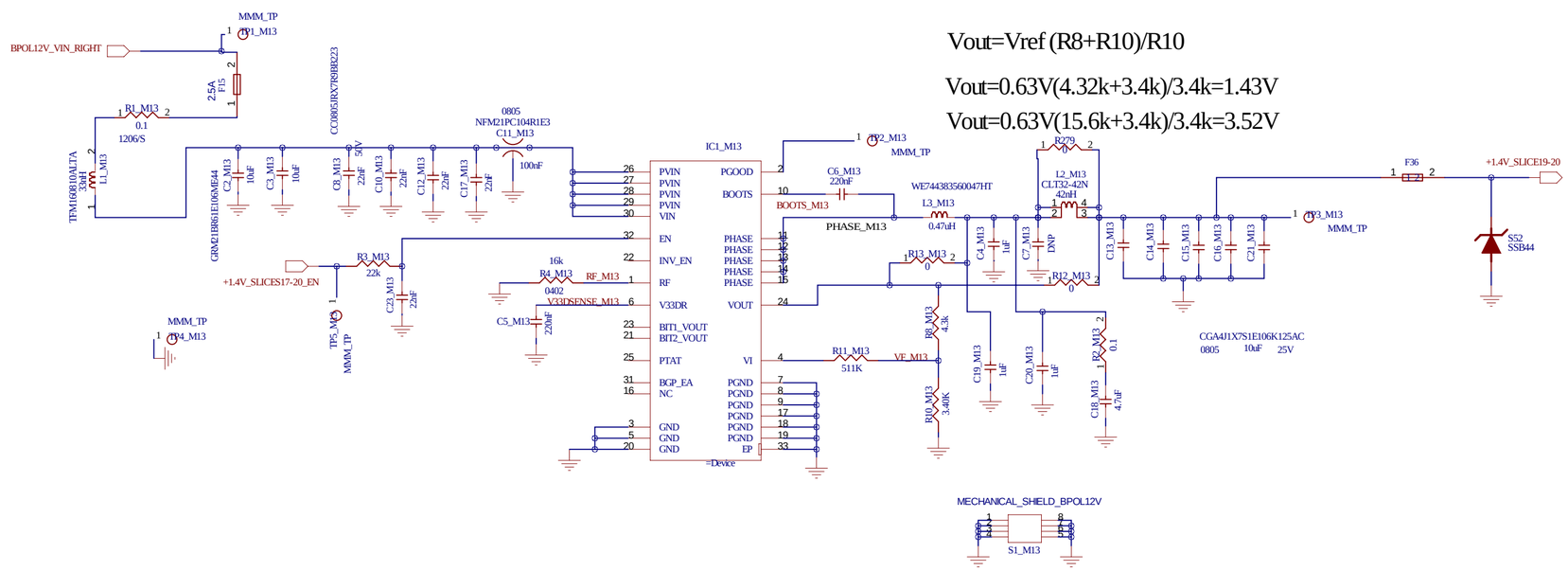

Vout=Vref (R8+R10)/R10

Vout=0.63V(4.32k+3.4k)/3.4k=1.43V

Vout=0.63V(15.6k+3.4k)/3.4k=3.52V

Project/Equipment -			
Document EP-ESE	***bPOL12V_MP =VariantName***	Designer P. Antoszczuk	
		Drawn by P. Antoszczuk	01/09/2021
		Check by -	-
		Last Mod -	-
		File	
		Print Date	Sheet 6 of 155
European Organization for Nuclear Research CH-1211 Genève 23 - Switzerland		EDA-04466-V1	Size A3 Rev -

Vout=Vref (R8+R10)/R10

Vout=0.63V(4.32k+3.4k)/3.4k=1.43V

Vout=0.63V(15.6k+3.4k)/3.4k=3.52V

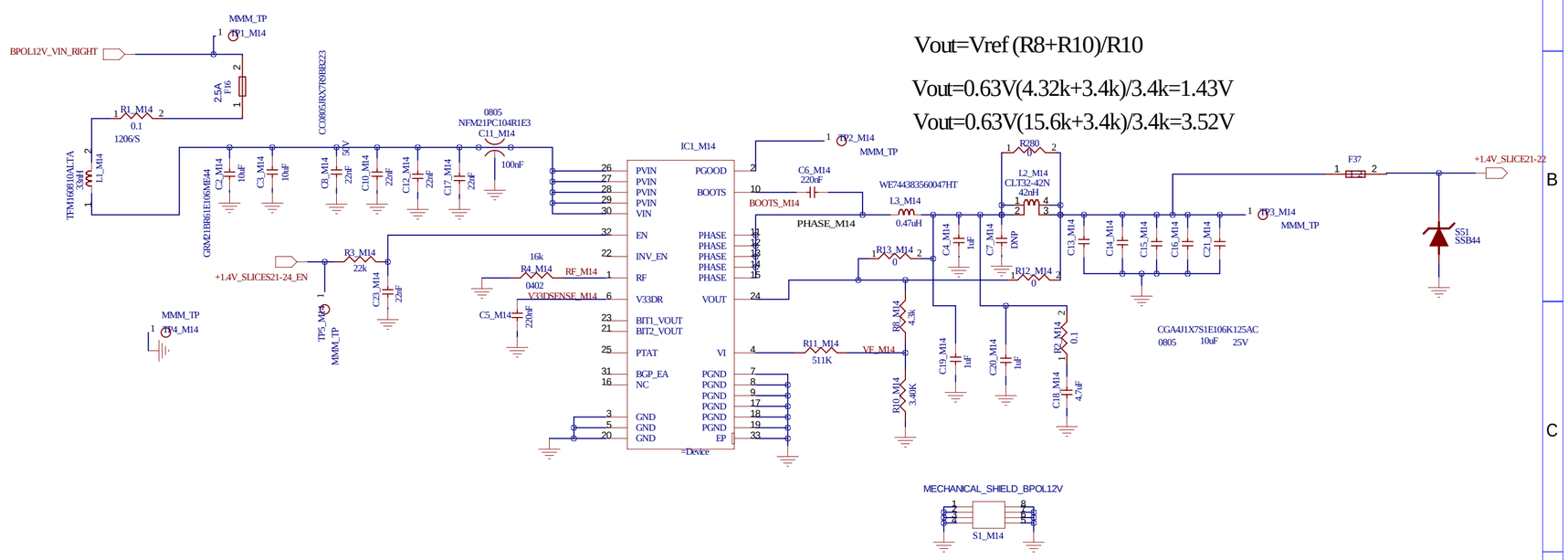

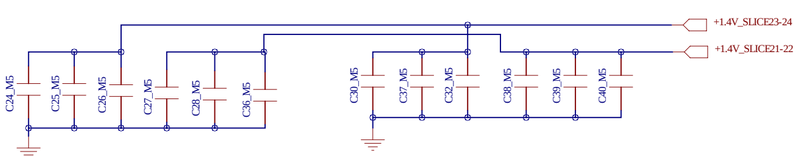

6 caps 22N 0603/100V

CGA3E2X7R2A223K080AE

6 caps 10N 0603/100V

CGA3E1C0G2A103J080AE

Project/Equipment -			
Document	**bPOL12V_MP**	Designer P. Antoszczuk	
EP-ESE	**=VariantName**	Drawn by P. Antoszczuk	01/09/2021
		Check by -	-
		Last Mod -	-
		File	
		Print Date	
European Organization for Nuclear Research CH-1211 Geneve 23 - Switzerland		EDA-04466-V1	Size A3 Rev -

Sheet 6 of 155

Vout=Vref (R8+R10)/R10

Vout=0.63V(4.32k+3.4k)/3.4k=1.43V

Vout=0.63V(15.6k+3.4k)/3.4k=3.52V

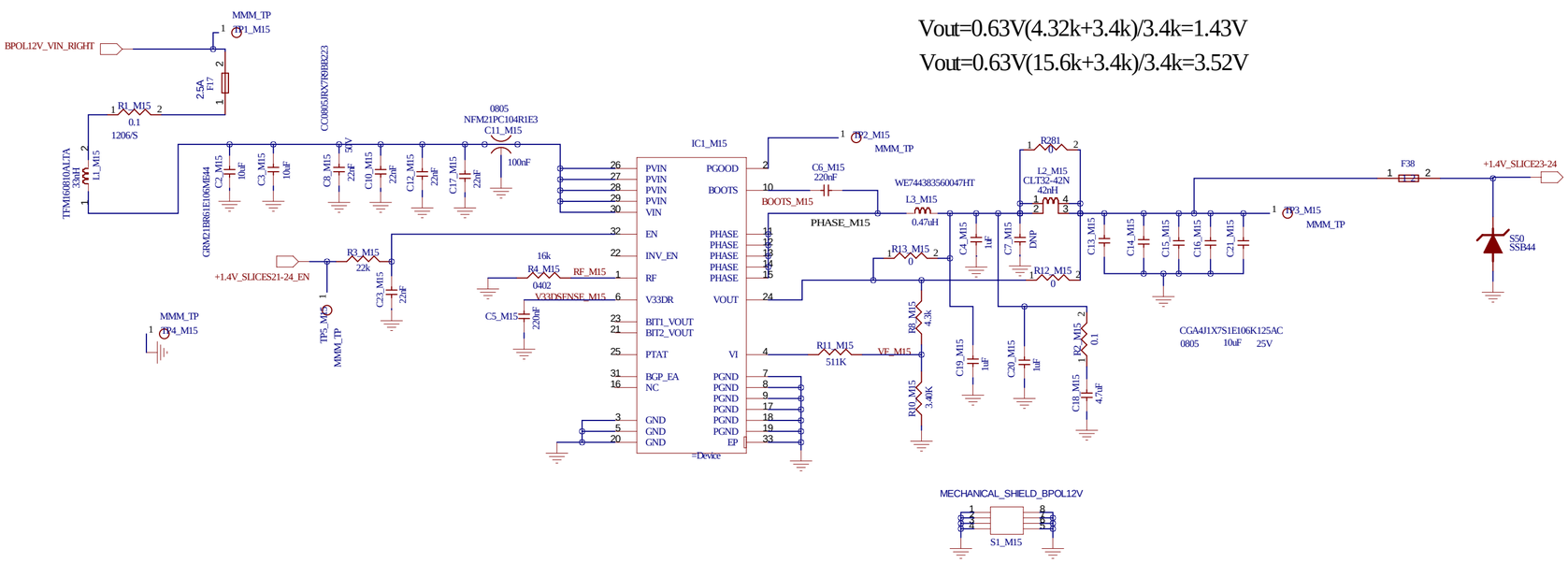

Project/Equipment -			
Document EP-ESE	bPOL12V_MP =VariantName	Designer P. Antoszczuk	
		Drawn by P. Antoszczuk	01/09/2021
		Check by -	-
		Last Mod.	-
		File	
		Print Date	
European Organization for Nuclear Research CH-1211 Genève 23 - Switzerland		EDA-04466-V1	Size A3 Rev -

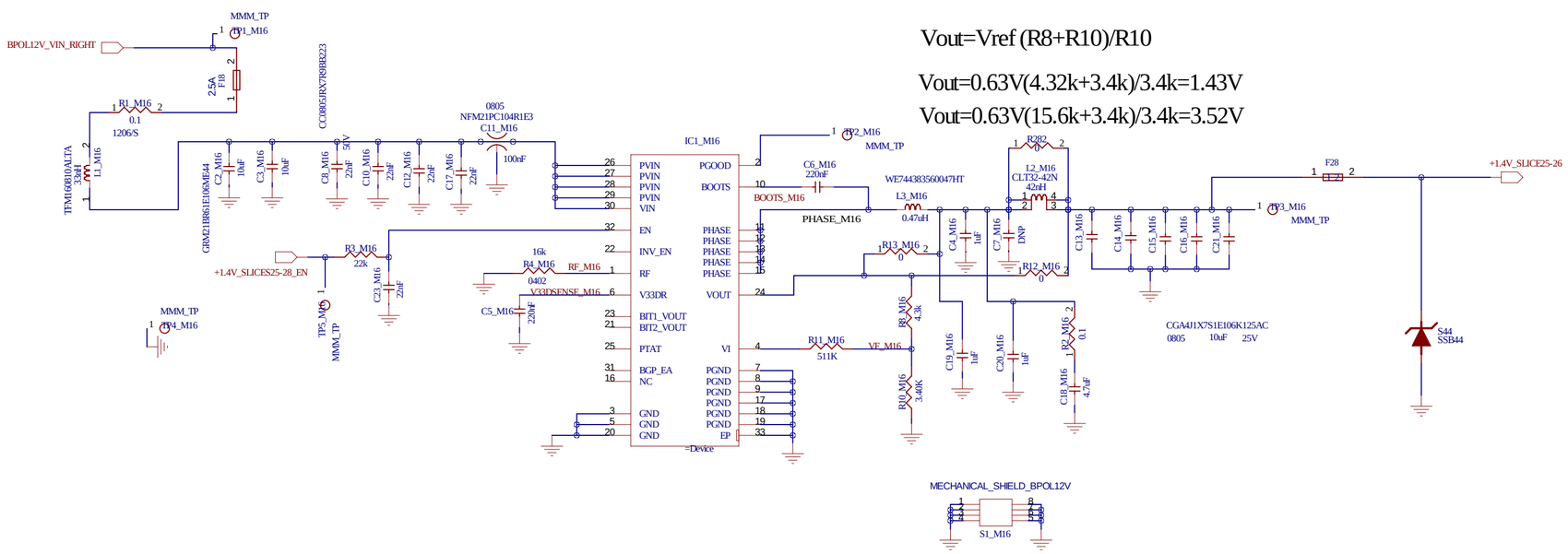

Vout=Vref (R8+R10)/R10

Vout=0.63V(4.32k+3.4k)/3.4k=1.43V

Vout=0.63V(15.6k+3.4k)/3.4k=3.52V

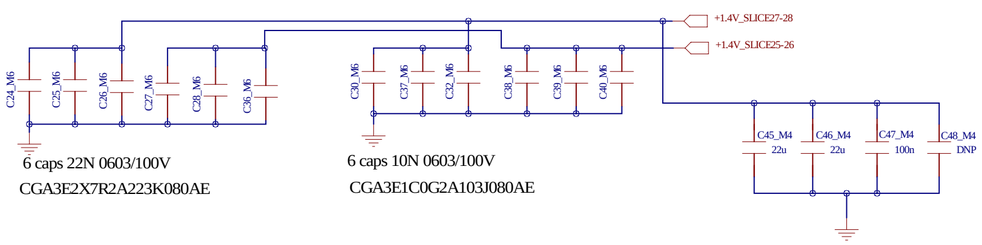

6 caps 22N 0603/100V

CGA3E2X7R2A223K080AE

6 caps 10N 0603/100V

CGA3E1C0G2A103J080AE

Project/Equipment -			
Document	**bPOL12V_MP**	Designer P. Antoszczuk	
EP-ESE	**=VariantName**	Drawn by P. Antoszczuk	01/09/2021
		Check by -	
		Last Mod -	
		File	
		Print Date	
European Organization for Nuclear Research CH-1211 Genève 23 - Switzerland		EDA-04466-V1	A3 -

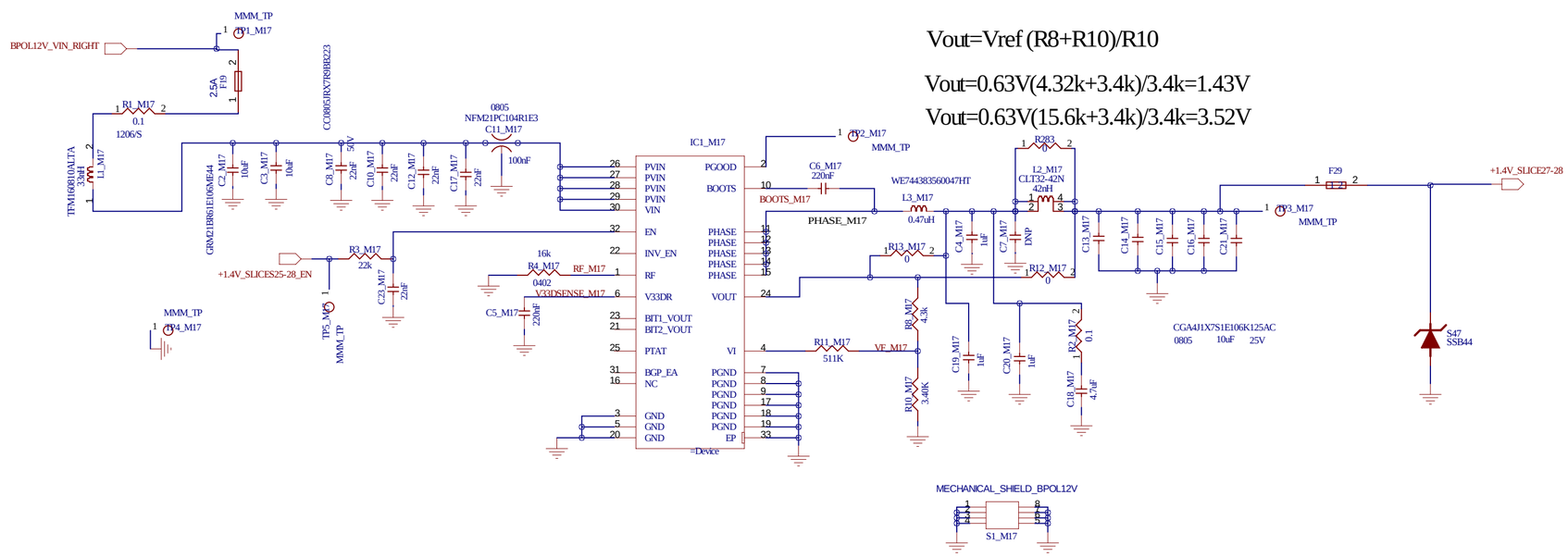

Project/Equipment	-
Document	EP-ESE
bPOL12V_MP	
=VariantName	
Designer	P. Antoszczuk
Drawn by	P. Antoszczuk 01/09/2021
Check.by	-
Last Mod.	-
File	
Print Date	
Sheet	60 of 155
Size	A3
Rev	-

European Organization for Nuclear Research
CH-1211 Geneve 23 - Switzerland

EDA-04466-V1

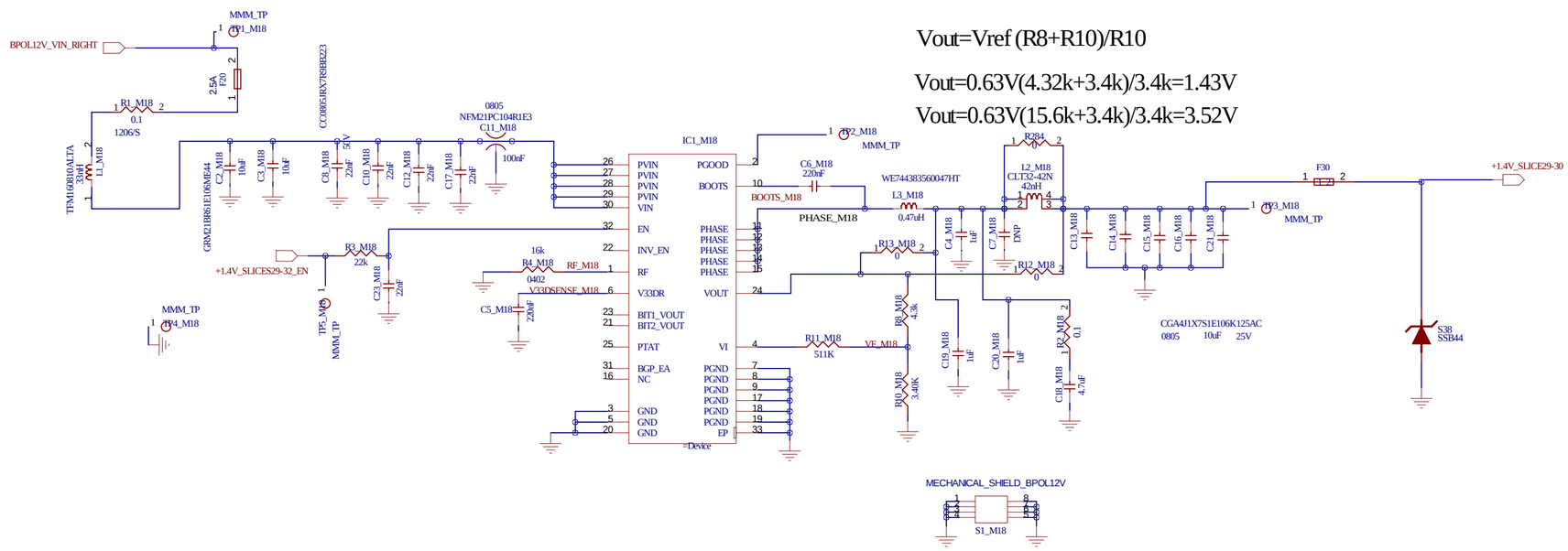

Vout=Vref (R8+R10)/R10

Vout=0.63V(4.32k+3.4k)/3.4k=1.43V

Vout=0.63V(15.6k+3.4k)/3.4k=3.52V

6 caps 22N 0603/100V

CGA3E2X7R2A223K080AE

6 caps 10N 0603/100V

CGA3E1C0G2A103J080AE

Project/Equipment	-		
Document	***bPOL12V_MP***	Designer P. Antoszczuk	
EP-ESE	***=VariantName***	Drawn by P. Antoszczuk	01/09/2021
		Check by -	-
		Last Mod.	-
		File	
		Print Date	
European Organization for Nuclear Research		Sheet 1 of 155	
CH-1211 Genève 23 - Switzerland		EDA-04466-V1	Size A3 Rev -

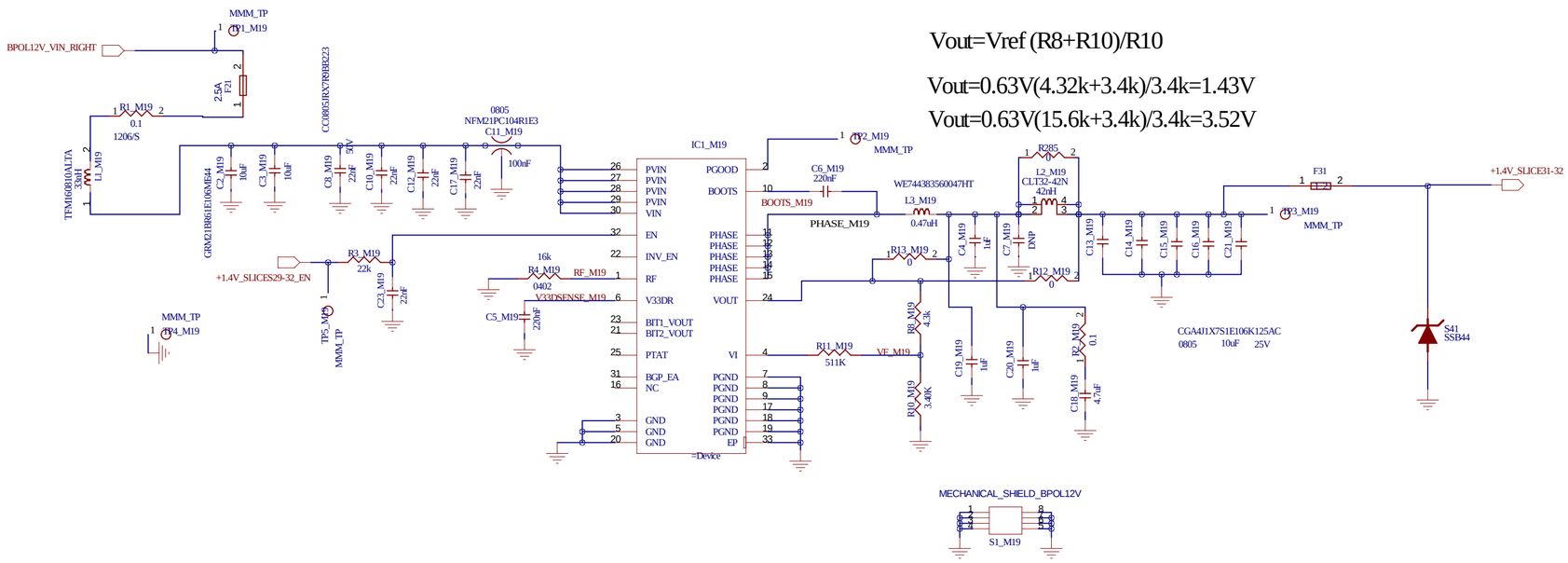

Vout=Vref (R8+R10)/R10

Vout=0.63V(4.32k+3.4k)/3.4k=1.43V

Vout=0.63V(15.6k+3.4k)/3.4k=3.52V

Project/Equipment -			
Document EP-ESE	***bPOL12V_MP =VariantName***	Designer P. Antoszczuk	
		Drawn by P. Antoszczuk	01/09/2021
		Check by -	-
		Last Mod -	-
		File	
		Print Date	
	European Organization for Nuclear Research CH-1211 Genève 23 - Switzerland	EDA-04466-V1	Size A3 Rev -

Sheet 6 of 155

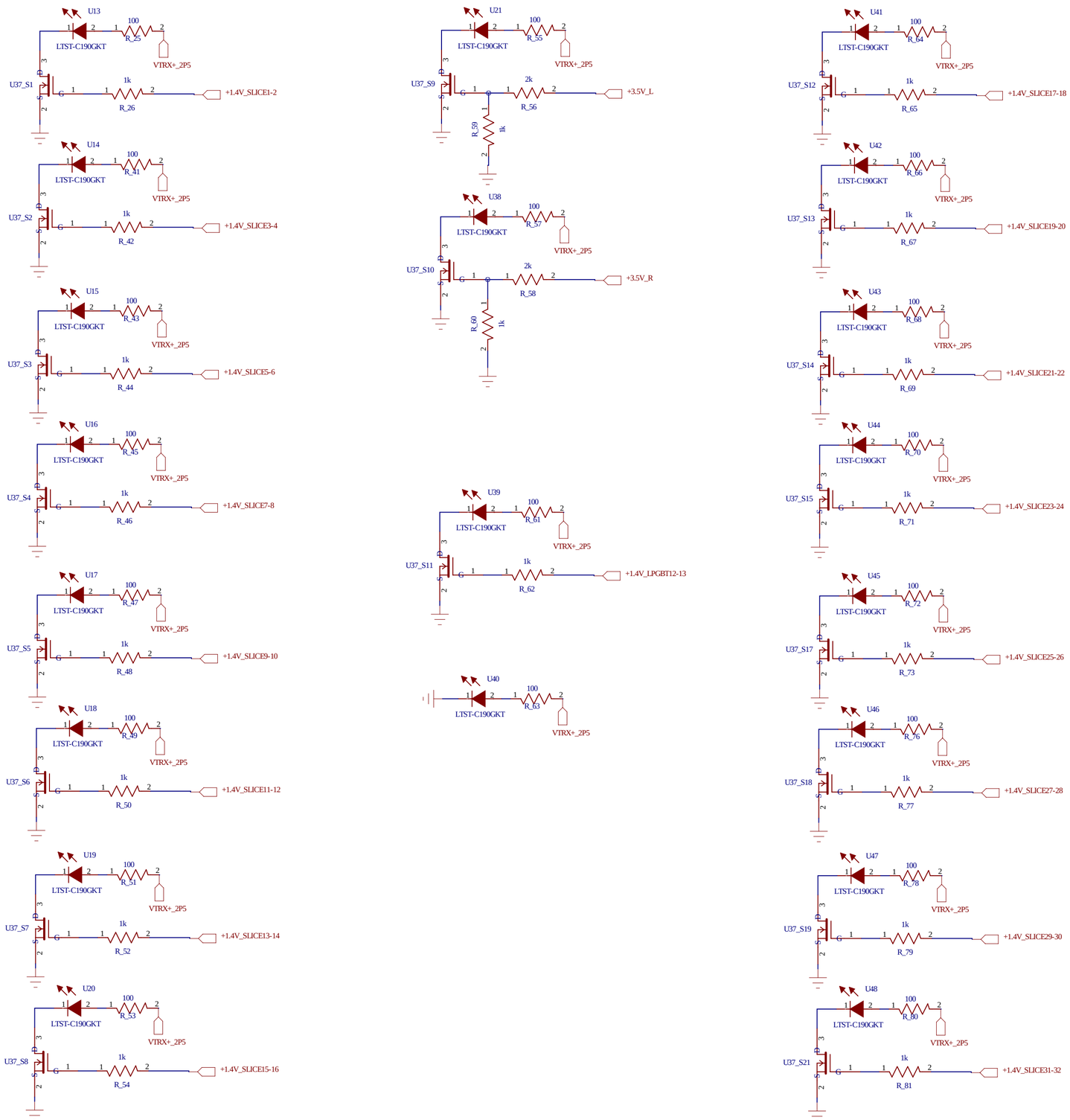

REVISION RECORD

LTR	ECO NO:	APPROVED:	DATE:

DRAWN: Jb	DATED: <Drawn Date>	COMPANY: Nevis Laboratories of Columbia University		
CHECKED: jb	DATED: <Checked Date>	TITLE: FEB2 prototype v2.0		
QUALITY CONTROL: jb	DATED: <QC Date>	CODE: jb2023	SIZE: C	DRAWING NO: 35 REV: v2.0
RELEASED: jb	DATED: <Release Date>	SCALE: <Scale>		SHEET: 152 OF 155

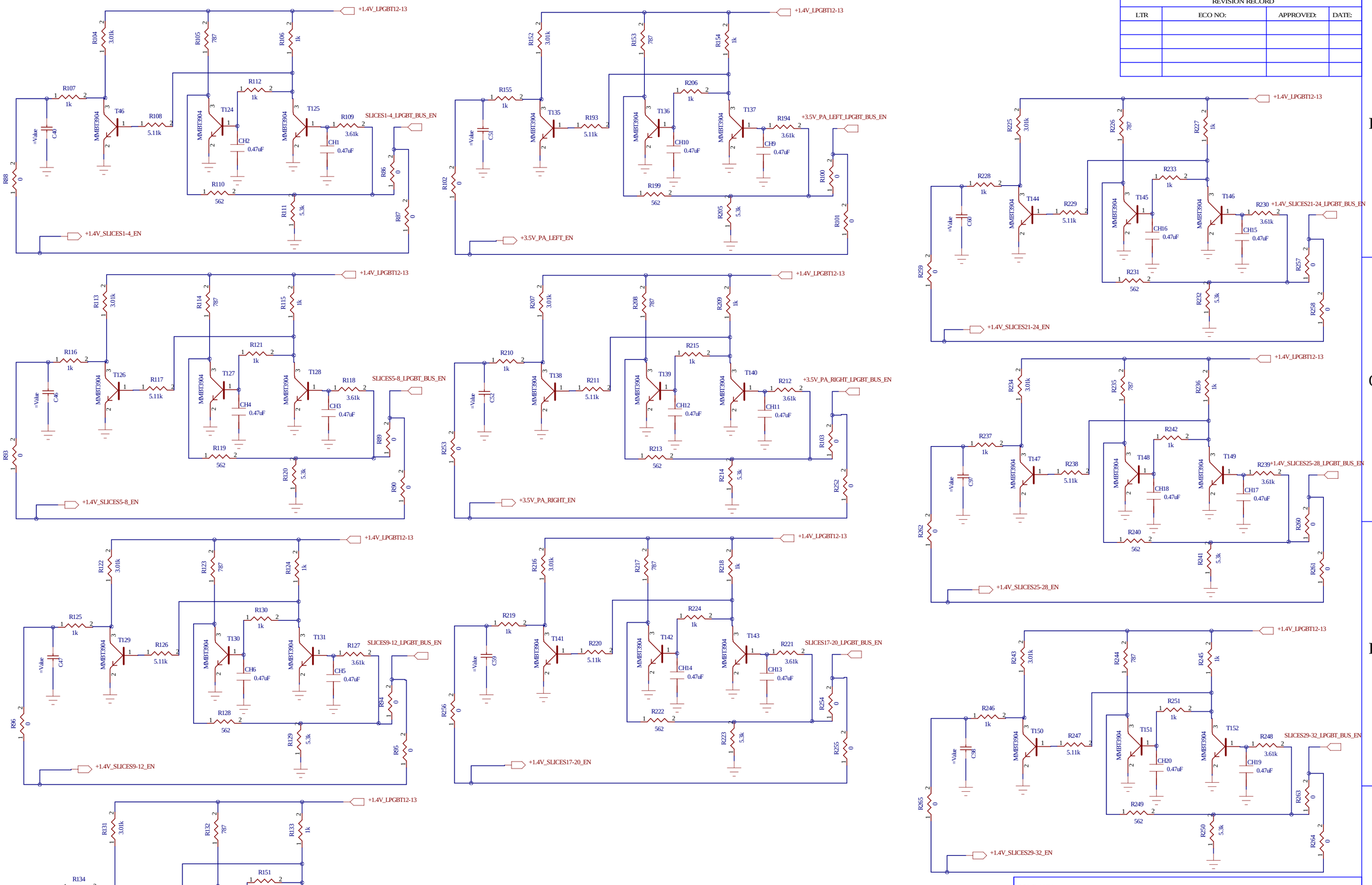

REVISION RECORD			
LTR	ECO NO:	APPROVED:	DATE:

DRAWN: Jb	DATED: <Drawn Date>	COMPANY: Nevis Laboratories of Columbia University	
CHECKED: jb	DATED: <Checked Date>	TITLE: FEB2 prototype v2.0	
QUALITY CONTROL: jb	DATED: <QC Date>	CODE: jb2023	SIZE: C
RELEASED: jb	DATED: <Release Date>	DRAWING NO: 35	REV: v2.0
		SCALE: <Scale>	SHEET: 63 OF 155

REVISION RECORD			
LTR	ECO NO:	APPROVED:	DATE:

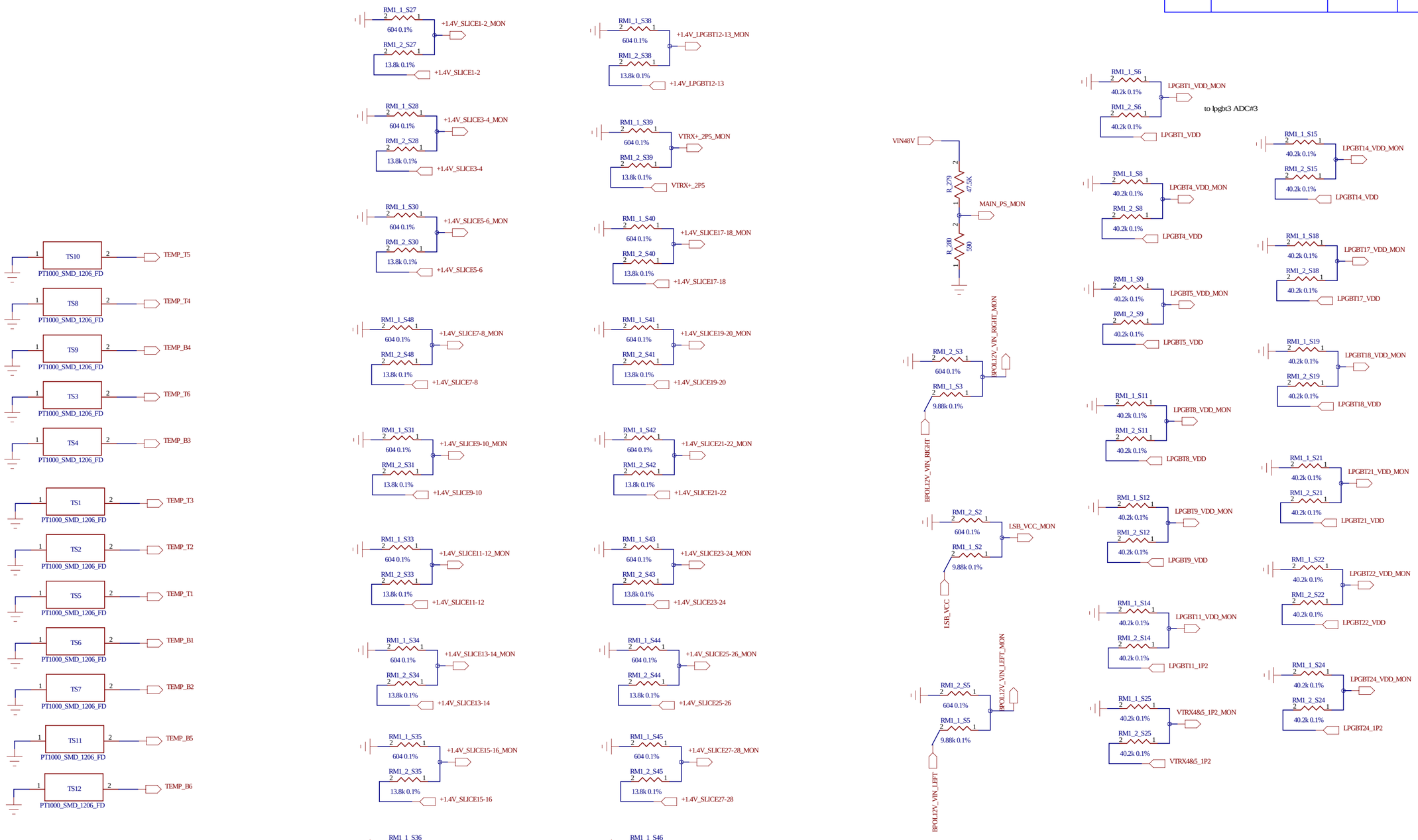

DRAWN: Jb	DATED: <Drawn Date>	COMPANY: Nevis Laboratories of Columbia University			
CHECKED: jb	DATED: <Checked Date>	TITLE: FEB2 prototype v2.0			
QUALITY CONTROL: jb	DATED: <QC Date>	CODE: jb2023	SIZE: C	DRAWING NO: 35	REV: v2.0
RELEASED: jb	DATED: <Release Date>	SCALE: <Scale>		SHEET: 154 OF 155	

REVISION RECORD			
LTR	ECO NO:	APPROVED:	DATE:

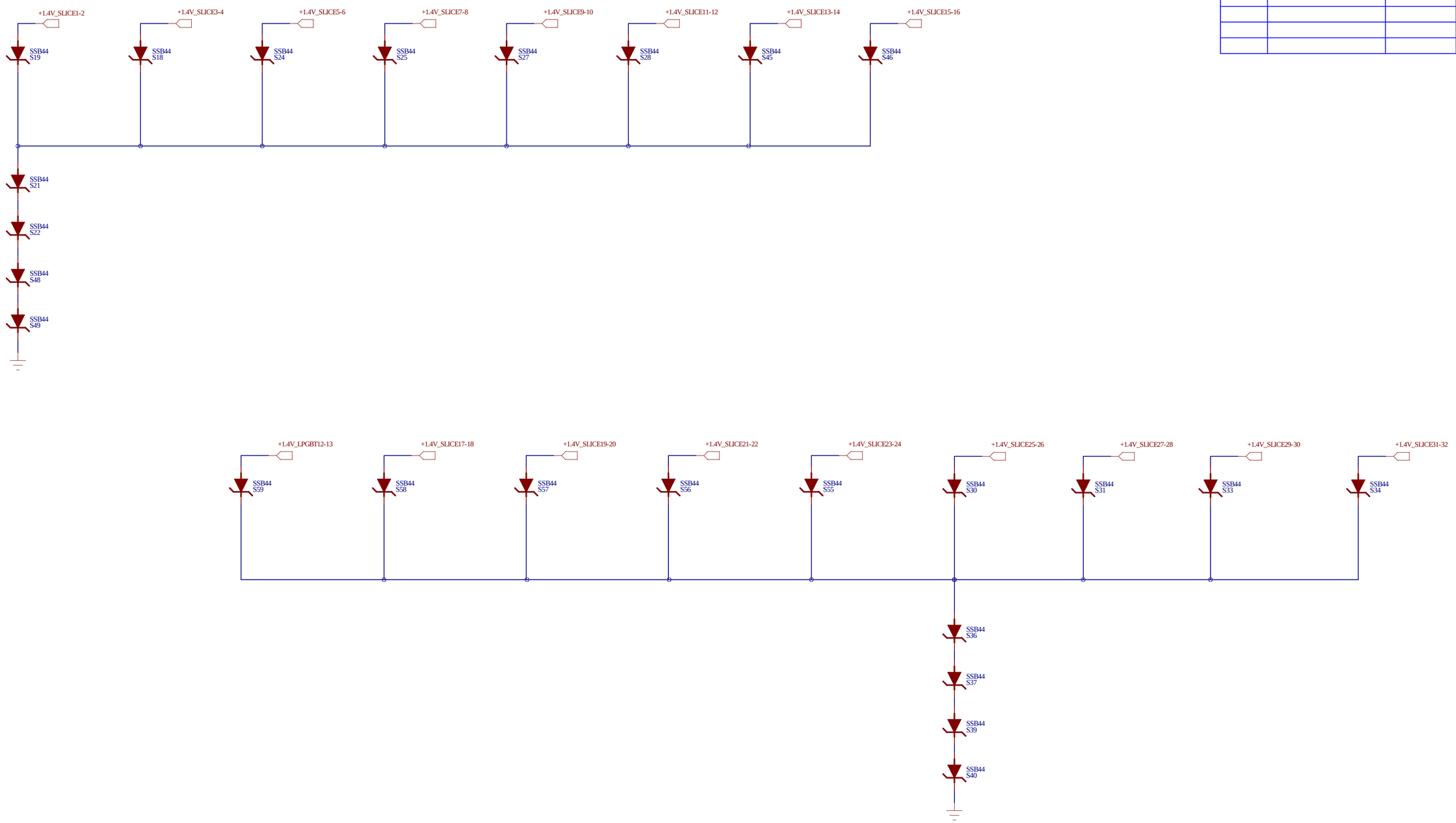

COMPANY: Nevis Laboratories of Columbia University			
TITLE: FEB2 prototype v2.0			
CODE: jb2023	SIZE: C	DRAWING NO: 35	REV: v2.0
SCALE: <Scale>		SHEET: 155 OF 155	

DRAWN: Jb	DATED: <Drawn Date>
CHECKED: jb	DATED: <Checked Date>
QUALITY CONTROL: jb	DATED: <QC Date>
RELEASED: jb	DATED: <Release Date>